CONTRA COSTA COUNTY

AGENDA

Contra Costa County Zoning Administrator

Monday, November 4, 2024 | **1:30 PM** | **30 Muir Road, Martinez**

Zoom: https://cccounty-us.zoom.us/j/89580629496 | Call in: (888) 278-0254 Access Code 198675#

The Zoning Administrator meeting will be accessible in-person, via telephone, and via live-streaming to all members of the public. Zoning Administrator meetings can be viewed live online at: http://contra-costa.granicus.com/ViewPublisher.php?view_id=13.

Persons who wish to address the Zoning Administrator during public comment or with respect to an item on the agenda may comment in person or may call in during the meeting by dialing (888) 278-0254, followed by the access code 198675##. A caller should indicate they wish to speak on an agenda item, by pushing "#2" on their phone. Access via Zoom is also available using the following link: https://cccounty-us.zoom.us/j/89580629496. Those participating via Zoom should indicate they wish to speak on an agenda item by using the "raise your hand" feature in the Zoom app. Public comments may also be submitted before the meeting by email at planninghearing@dcd.cccounty.us or by voicemail at (925) 655-2860.

Commenters will generally be limited to three (3) minutes each. Comments submitted by email or voicemail will be included in the record of the meeting but will not be read or played aloud during the meeting. The Zoning Administrator may reduce the amount of time allotted per commenter at the beginning of each item or public comment period depending on the number of commenters and the business of the day. The Zoning Administrator may alter the order of agenda items at the meeting. Your patience is appreciated.

The Community Development Division of the Department of Conservation and Development will provide reasonable accommodations to those persons needing translation services and for persons with disabilities who wish to participate in Zoning Administrator meetings. Please contact Hiliana Li at least 48 hours before the meeting at (925) 655-2860.

1. PUBLIC COMMENTS:

2. LAND USE PERMIT: PUBLIC HEARING

2a. PAUL BENEDYUK MASTEC NETWORK SOLUTIONS (Applicant) - TRACT 6432 COMMON AREA (Owner), County File #CDLP24-02006: The applicant requests approval of a Land Use Permit to reestablish an AT&T wireless telecommunications facility on the subject property. The project would allow the continued operation of an existing telecommunications facility that had been previously authorized under Land Use Permit #CDLP08-02065, which expired in 2019. The project includes proposed modifications to the existing facility including the removal of six (6) existing antennae with associated wiring and brackets on the existing lattice tower. Additionally, the project would authorize the installation of fifteen (15) new antennae, resulting in a net increase of nine (9) antennae, on an existing lattice tower. The project would also involve the installation of ancillary equipment, antenna mounting brackets, and wiring on the existing lattice tower. Lastly, within an existing equipment enclosure at ground level, the project would remove three (3) existing radio relay units and install new electrical equipment including one (1) DC12 surge suppressor, one (1) new 155 amp-hour battery string within an existing battery cabinet, and four (4) new infinity rectifiers. The subject property is an unaddressed +2.55-acre parcel located immediately southwest of the intersection of Eagle Ridge Drive / Eagle Nest Place, in the unincorporated Danville Area of the County. (Zoning: P-1) (APN 203-760-026) AV **24-3621**

Attachments: CDLP24-2006 Findings and Conditions of Approval
Maps
Project Plans
Photosims
Electromagnetic Emissions Report
Agency Comments

PLEASE NOTE: THE NEXT MEETING OF THE CONTRA COSTA COUNTY ZONING ADMINISTRATOR WILL BE HELD ON MONDAY, NOVEMBER 18, 2024.

File #: 24-3621 **Agenda Date:** 11/4/2024 **Agenda #:** 2a.

Department of Conservation and Development
County Zoning Administrator

Project Title:	Land Use Permit Renewal for Existing AT&T Wireless Facility
County File(s):	#CDLP24-02006
Applicant:	Paul Benedyuk MasTec Network Solutions
Owners:	Tract 6432 Common Area
Zoning/General Plan:	Planned Unit District (P-1) / Parks and Recreation (PR)
Site Address/Location:	0 Eagle Nest Pl. (Unaddressed parcel located at NE corner of Blackhawk Drive/Eagle Nest Place), Blackhawk (APN: 203-760-026)
California Environmental Quality Act (CEQA) Status:	Categorical Exemption: Class I, CEQA Guidelines Section 15303 (d).
Project Planner:	Adrian Veliz, Senior Planner (925) 655-2879 Adrian.Veliz@dcd.cccounty.us
Staff Recommendation:	Approve (See Section II for Full Recommendation)

I. PROJECT SUMMARY

The applicant requests approval of a Land Use Permit / Development Plan combination permit approval to reestablish an AT&T wireless telecommunications facility on the subject property. The project would allow the continued operation of an existing telecommunications facility that had been previously authorized under Land Use Permit #CDLP08-02065, which expired in 2019. The project includes proposed modification to the existing facility including the removal of six (6) existing antennas, and installation fifteen (15), resulting in a net increase of nine (9) antennas on an existing lattice tower. The project would also involve the installation of ancillary equipment, brackets, and wiring on the existing lattice tower, as well as the installation of equipment cabinets and electrical equipment within an existing equipment shelter located at ground level.

II. RECOMMENDATION

Staff recommends that the Zoning Administrator:

A. OPEN the public hearing on the proposed project, RECEIVE testimony, and CLOSE the public hearing.

B. DETERMINE that the proposed project is exempt from the California Environmental Quality Act (CEQA) under CEQA Guidelines Section 15303.

C. APPROVE the proposed Land Use Permit CDLP24-02006.

D. APPROVE the attached findings in support of the project.

E. APPROVE the attached conditions of approval.

F. DIRECT staff to file a CEQA Notice of Exemption with the County Clerk.

III. GENERAL INFORMATION

A. General Plan: Parks and Recreation (PR)

B. Zoning: P-1, Planned Unit District

C. California Environmental Quality Act (CEQA) Compliance: Categorical Exemption - Class 1: CEQA Guidelines Section 15301 (b), the continued operation of investor and publicly owned utilities, involving negligible or no expansion of the existing or former use, are exempt from review.

D. Previous Applications of Relevance:

1) CDLP22-02008: A land use permit/development plan authorizing the collocation of a Dish Wireless telecommunications facility on the existing lattice tower on which the subject AT&T facility is installed. The Land Use Permit was approved by the Zoning Administrator on November 21, 2022.

2) CDWM18-00037: A minor alteration permit, approved March 27, 2019, authorizing the installation of new equipment cabinets, replacement of six (6) panel antennas, and removal/replacement of radio relay units and associated cabling.

3) CDLP08-02065: A land use permit authorizing modification of development plan #CDDP05-03059 to permit the installation of additional antennas and equipment cabinets within the existing lease area for the cellular telecommunications facility. The land use permit was approved on July 6, 2009.

4) CDDP05-03059: A development plan permit modifying final development plan for the Blackhawk area (FDP #3004-84) authorizing the establishment of a Cingular Wireless telecommunications facility on an existing PG&E lattice tower on the subject property. The development plan modification was approved on February 27, 2006 for the installation and operation of the telecommunications facility. Cingular wireless was subsequently acquired by AT&T, and the existing facility has since been operated by AT&T.

5) FDP 3003-84: A Final Development plan for the Blackhawk Country Club area, as established in

connection with the County's prior approval of subdivision and rezoning approvals (1840-RZ/ SD6432). The project site consists of lands designated as Parks and Recreation on the approved final map, near existing high voltage lines. The County Zoning Administrator approved the final development plan on April 6, 1984.

6) SD6432: A subdivision creating 21 single-family residential lots on 22 acres and an additional 67.3 acres of lands designated Open Space / Parks and Recreation. The subdivision was approved by the San Ramon Valley Planning Commission (SRVPC)

7) DP 3035-78: On July 12, 1978, the SRVPC approved a development plan to establish the Blackhawk Country Club.

8) 1840-RZ: The San Ramon Valley Regional Planning Commission (SRVPC) approved the rezoning of 4,775 acres from A-2 General Agriculture District to P-1; Ordinance 74-55 approved September 17, 1973.

IV. SITE/ AREA DESCRIPTION

The subject site is an approximately 2.55 acre parcel that has a "Parks and Recreation" (PR) general plan land use designation. The site is within the Blackhawk Country Club area, approximately 3.5 miles east of the central business district of Danville. The site is located west of the intersection of Eagle Nest Place and Eagle Nest Road, between Eagle Ridge Drive and Blackhawk Drive. The Blackhawk County Club sport complex is located north of the site, while single-family residential development abuts the site to the east, west and south.

Two existing PG&E transmission towers (eastern tower and western tower) are located on the subject property within an existing 175-foot-wide PG&E easement. The existing telecommunications facility is located on the western tower, which is entirely within the aforementioned PG&E easement and which presently has a height of 131 feet. The proposed project would install additional antennas atop the existing western transmission tower, resulting in a height increase of about three (3) feet.

Existing Site Condition: The subject property predominantly consists of annual grasslands and lacks any significant structural development. The vast majority of the subject property is encumbered by an existing 175-foot-wide PG&E easement. Considering this and the relatively restrictive Parks and Recreation General Plan Land Use designation, the project site has little to no development potential. The existing facility is located upon a hilltop in the western/central area of the parcel, overlooking nearby residential and recreational development. Elevations range from approximately 900 to 940 feet above sea level. Improvements on the subject property include a 10-foot-wide northerly access gravel road providing vehicular access to the project site from Eagle Ridge Road.

VI. PROJECT DESCRIPTION

The applicant requests approval of a Land Use Permit approval to reestablish an AT&T wireless telecommunications facility on the subject property. The project would allow the continued operation of an existing telecommunications facility that had been previously authorized under Land Use Permit #CDLP08-02065, which expired in 2019. The project includes equipment upgrades as detailed below:

Changes to Existing Lattice Tower (Above Conductor)

- Removal of six (6) existing (e) panel antennas and associated coaxial cable;

- Installation of nine (9) new panel antennas and associated mounting brackets and coaxial cable;
- Relocation of nine (9) existing Radio Relay Units (RRU's) and three (3) existing mounting frame to three feet below present location;
- Installation of three (3) new diplexers (1 per sector);

Changes to Existing Lattice Tower (Below Conductor)

- Installation of six (6) new antennas (2 per sector);
- Installation of one (1) DC9 Squid, H-Frame, and associated mounting bracket/hardware;
- Installation of three (3) new RRU's, H-Frames, and associated mounting brackets/hardware;
- Installation of three (3) 6AWG trunks;
- Installation of one (1) 24-pair fiber trunk;

Changes within Existing Equipment Shelter

- Removal three (3) existing RRU's;
- Installation of one (1) new DC12 (on existing H-frame vacated by RRU's);
- Installation of new 155AH battery string within (e) backup battery cabinet;
- Installation of four (4) new Infinity-48 Rectifiers
- Installation of one (1) Baseband unit within (e) Purcell cabinet;

VI. AGENCY COMMENTS

A. San Ramon Valley Fire Protection District (SRVFPD): In a memo dated March 7, 2024, SRVFPD staff indicated that they have no comments on the proposed project.

B. East Bay Municipal Utility District (EBMUD): In an email dated March 22, 2024, EBMUD staff advised that they have no comments on the proposed project.

Comments were solicited but not received from County Building Inspection Division, Contra Costa Environmental Health, and Central Conta Costa Sanitary District as of the writing of this report.

VII. STAFF ANALYSIS AND DISCUSSION

A. General Plan: The subject property is located within a Parks and Recreation (PR) General Plan Land Use designation. The PR designation includes both publicly and privately-owned park facilities and golf courses. Appropriate land uses within PR include passive and active recreation-oriented activities, including ancillary commercial uses such as snack bars and restaurants. The project would allow for the continued operation of a cellular telecommunications facility. The continued provision of cellular service would be of benefit to nearby residents and those utilizing nearby recreational facilities. Considering that this use has long been established at this location and is of benefit to those residing nearby and/or commuting through the area, the land use is considered consistent and harmonious with land uses allowed within the PR designation. Further, considering that the subject property has extremely limited development potential due to an existing easement encumbering most of the parcels land area, the project will not displace open space or park lands that may otherwise be enjoyed by the community.

B. Zoning: The project site is located within an Planned Unit (P-1) zoning district. The purpose of

the P-1 district is to provide site-specific development standards allowing for more flexible development than traditional zoning districts. The intent and purpose for the Blackhawk Country Club P-1 district is to provide for a mix of low-density single-family residential neighborhoods, and recreational facilities amongst the surrounding Diablo foothills. Telecommunications facilities are a conditionally permitted land use within all land use districts - including within traditional single-family residential districts - upon approval of a Land Use Permit. The facility is located upon an existing PG&E lattice tower, and would not reduce existing setbacks for that structure, nor would it substantially increase the height of the lattice tower. Thus, the project does not conflict with the allowed uses within the Blackhawk P-1 district, or with land uses that are typically permitted in predominantly residential neighborhoods.

C. Wireless Telecommunications Facilities Ordinance (Chapter 88-24): The existing wireless telecommunications facility was established under a Land Use Permit approved by the County in 2005 and most recently renewed in 2009. This application is a request to renew the expired Land Use Permit for the as-built facility, pursuant to code section 88-24.620(a), for the continued operation of the existing facility.

D. Appropriateness of Use: The subject communications tower has been established on the subject property for approximately 19 years. The County is unaware of any nuisances arising from the operation of the existing facility to date. Wireless telecommunications facilities are conditionally permitted in all residential zoning districts within the County, as well as within the predominantly residential Blackhawk Planned Unit (P-1) District in which the subject property is located. The project would allow for the continuation of a permitted land use which is consistent and compatible with its semi-urbanized residential surroundings. Additionally, the existing high-voltage transmission lines on site are considered hazardous to people in close proximity - severely limiting potential alternative uses of lands within the 175-foot-wide PG&E easement that encompasses the telecommunications facility as well as the vast majority of land area on the subject property. Thus, the continued operation of the facility would not be to the detriment of established or future recreation-oriented land-use activities on or near the project site. Therefore, the project is an appropriate use of the subject property.

E. Federal Communications Commission (FCC) Compliance: The applicant has provided a report on theoretical modeling of Radio Frequency (RF) emissions originating from the facility, to predict the cumulative exposure from existing antennas at ground level. The RF report, prepared by a licensed electrical engineer, indicates that the predicted level of RF emissions measured at ground level will not exceed the FCC general public exposure limit at any publicly-accessible location. The report indicates that the posting of signage, consistent with OSHA standards, around the facility warning workers of the elevated emissions will minimize occupational hazards associated with RF exposure. The project is conditioned to comply with applicable FCC requirements at all times, including those requiring the installation of signage at facility access points to alert of the potential for RF exposure beyond the general public and/or occupational limits. Therefore, as conditioned, the project is compliant with federal regulations pertaining to RF emissions.

VIII. CONCLUSION

The project would reestablish an expired land use permit for the purpose of authorizing the continued operation of an existing wireless telecommunications facility on the subject property. The project does not involve a substantial modification to the established facility, as defined in Title 47, Code of Federal Regulations, Section

1.40001. As discussed throughout this report, the long-established land use is consistent with the County's Wireless Ordinance, the Parks and Recreation (PR) General Plan Land Use Designation, the P-1 zoning district, as well as FCC radio frequency emissions standards. Therefore, staff recommends that the Zoning Administrator approve County File #CDLP24-02006 based on the attached findings and subject to the attached conditions of approval.

G:\Current Planning\curr-plan\CD APPLICATIONS\Land Use Permits (LP)\2024\CDLP24-02006\NOTES AND WORKING DOCUMENTS\CDLP24-2006_SR_.docx

FINDINGS AND CONDITIONS OF APPROVAL FOR COUNTY FILE #CDLP24-2006; PAUL BENEDYUK MASTEC NETWORK SOLUTIONS (APPLICANT) / TRACT 6432 COMMON AREA (OWNER)

FINDINGS

A. Planned Unit District Development Plan Modification Findings

1. *That the project, as conditioned, is consistent with the intent and purpose of the zoning district and is compatible with other uses in the vicinity, both inside and outside the district.*

   Project Finding: This Blackhawk P-1 District allows for a variety of uses as established through the approval of Final Development Plan CDDP84-03003 on March 21, 1984. This Development Plan has resulted in the creation of a cohesive and harmonious collection of uses consistent with the Blackhawk area General Plan land use designations. New uses that are not among those uses initially established by CDDP84-03003 can be added through an approved modification to the Development Plan. The current modification to CDDP84-03003 to allow the reestablishment of a previously entitled AT&T Wireless telecommunications facility is consistent with the zoning administrator's prior approval of CDDP05-03033 and CDDP05-03059 which established identical land uses on site, including the subject facility. Since the project does not involve a substantially alteration to the existing facility, it will continue to be consistent with the intent and purpose of the P-1 district.

2. *That the project is compatible with other uses in the vicinity, both inside and outside the district.*

   The existing AT&T wireless telecommunications facility is located on a parcel that was designated as open space by CDDP84-03003, in part because it was part of the existing PG&E transmission power line corridor. CDDP84-03003 incorporated the existing utility use of the parcel, and authorized use of the parcel for wireless telecommunication facilities by subsequent Development Plans CDDP05-03033 and CDDP05-03059. The current modification to CDDP84-03003 to allow the reestablishment of a previously entitled AT&T Wireless telecommunications facility is consistent with the intent and purpose of CDDP84-03003, as well as with subsequent approvals that established the identical land use on site. The project does not substantially modify the existing facility and will allow for the wireless carrier to continue providing a vital service to residents, recreationists, and motorists in the area. Therefore, the project is compatible with other uses in the

vicinity, both inside and outside of the P-1 district.

B. Land Use Permit Findings

1. *The proposed project shall not be detrimental to the health, safety and general welfare of the County.*

   Project Finding: The project allows the continued operation of an existing communications facility located on an existing PG&E lattice tower on an undeveloped parcel. The continued operation of said facility, with equipment upgrades including but not limited to a net increase of nine (9) antennas, will not be detrimental to health, safety, and general welfare of the County based on the site's compliance with Federal Communications Commission (FCC) regulations for exposure to electro-magnetic fields. Based on an electromagnetic emissions (EME) report dated January 29, 2024, by EBI Consulting, the increase in antennas resulting from the project would not result in emissions exceeding applicable FCC regulations for public exposure at any publicly accessible location. EBI consulting notes that worst-case predictive modeling indicates that public exposure levels may be exceeded within 23 feet of antennas at the utility line level (approximately 118 feet above ground). Thus, the potential for exposure exceeding FCC regulations only exists on work surfaces upon the lattice tower itself, access to which is restricted to authorized personnel only. The EME report concludes that the installation of warning signage notifying personnel of EME exposure at the base of the tower is sufficient to meet FCC exposure regulations for the site. Therefore, there is no expectation that the continued operation of the existing facility, as modified by this Land Use Permit, would generate unsafe levels of RF emissions, as determined by the FCC. Further, the site is adequately secured to prevent public access to the equipment area. As such, the unmanned wireless facility will not be detrimental to the health, safety and general welfare of the County.

2. *The proposed project shall not adversely affect the orderly development within the County or the community.*

   Project Finding: The existing facility is located within an undeveloped parcel designated as Park and Recreation (PR) lands and is amongst other open spaces parcels within a low-density residential subdivision. Existing development on the site includes to two existing lattices supporting high-voltage electrical transmission lines within an existing 175-foot-wide PG&E easement. The project involves the continued operation of a wireless telecommunications facility and includes unmanned utility infrastructure consistent with the utility infrastructure existing on

site. Such facilities provide a vital service to nearby residents, recreationists, and motorists in the area. There is no record of code-enforcement or other nuisances reported in relation to the operation of the existing facility. Thus, there is no expectation that the continued operation of the wireless telecommunications facility would adversely affect the orderly development within the County or the community.

3. *The proposed project shall not adversely affect the preservation of property values and the protection of the tax base within the County.*

   Project Finding: The continued operation of the existing wireless facility, as modified by this Land Use Permit, limits the need for additional wireless facilities within the immediate area and does not involve substantial alterations to the as-built facility. The use is compatible with the surrounding area and established land use on the property. Therefore, the project would not expectedly affect property values or tax base within the County.

4. *The proposed project as conditioned shall not adversely affect the policy and goals as set by the General Plan.*

   Project Finding: The subject property is located within the Parks and Recreation (PR) General Plan land use designation. The project involves the continued operation of telecommunications facility within an established utility corridor. Although traditional recreational land uses on this parcel are precluded due to the existing PG&E transmission corridor, the project nonetheless provides a vital service to the area that is of benefit to recreationists on publicly accessible open space lands in the vicinity, as well as to nearby residents. Thus, continued operation of the wireless facility is generally consistent with its underlying general plan land use designation, and the project does not otherwise conflict with the policies and goals of the general plan.

5. *The proposed project shall not create a nuisance and/or enforcement problem within the neighborhood or community.*

   Project Finding: The facility is located on private property and is inaccessible to the general public. There is no record of any nuisance and/or enforcement issues arising from the operation of this site since its establishment in 1998. The site will remain unmanned except for routine and emergency maintenance visits. The facility does not generate significant levels of noise that could be considered a nuisance to the surrounding area. The operation of the existing facility has not been a nuisance and/or enforcement problem within the neighborhood or community to date and the project proposes would merely allow the continued

operation of this facility with minor alterations including the installation of additional antennas and ancillary equipment. Therefore, the project will not create a nuisance or enforcement problem.

6. *The proposed project as conditioned shall not encourage marginal development within the neighborhood.*

   Project Finding: The continued use of the existing facility will not affect the development of the subject property nor the surrounding area. Since close proximity to the existing transmission lines can be hazardous to human health, site access is already limited to authorized personnel only. Since the vast majority of land area within the project site is within this easement, the subject property has little to no development potential beyond its current use as a utility corridor. As such, the continued operation of the existing wireless telecommunications facility would have minimal effect on the developed open space and residential parcels in the immediate project vicinity. Therefore, the project would not encourage marginal development within the neighborhood.

7. *That special conditions or unique characteristics of the subject property and its location or surroundings are established.*

   Project Finding: The existing facility has been established on the subject property since 2006. Approval of this permit would allow the continued operation of the as-built facility with minor alterations including installation of additional antennas and ancillary equipment. The need for quality wireless communication service in this area arises from its proximity to nearby urban land uses within the Danville and Blackhawk communities. Thus, the conditions and characteristics of the subject property and its surroundings are established and would be largely unchanged by the approval of this permit.

C. Wireless Telecommunications Facility Land Use Permit Findings (County Code Section 88-24.614(b))

1. *The application is complete.*

   The application for a land use permit must comply with the submittal requirements in Section 88-24.604 of the Wireless Telecommunications Facilities Ordinance. County staff deemed this application complete upon receipt of cost estimates for the removal of the site, and photo simulations received on July 23, 2024.

2. *The facility or substantial change meets the requirements of Chapter 88-24 (Wireless Ordinance) of the County Ordinance Code.*

   Project Finding: The proposed design of the wireless telecommunications facility must comply with the applicable design requirements in Section 88-24.408 of the Wireless Telecommunications Facilities Ordinance. Some requirements include aesthetic designs to allow the facility to minimize its visual and aesthetic impacts on the surrounding area. Based on the project scope and the photo simulations provided by the applicant, the proposed design will have a minimal visual intrusiveness as the antennas will be placed on an existing PG&E transmission tower that already has wireless telecommunications antennas mounted on it. The project allows for the continued operation of an AT&T wireless telecommunications facility, for which a previously granted entitlement has expired. The facility is located on an existing lattice tower hosting existing another wireless telecommunications facility operated by another carrier, as well as existing electrical distribution infrastructure. The County Wireless Ordinance specifically encourages collocation of multiple carriers and/or utility providers where feasible. Thus, approval of the project would be consistent with location requirements of the County ordinance code (Ordinance Section 88-24.406) by allowing for the continued collocation of multiple carriers at the same site. Additionally, the wireless telecommunications facility has conditions of approval that require a non-reflective finish on equipment and that the equipment must be painted and textured to match or blend with the predominate background.

   The applicant also submitted a RF report, prepared by EBI consulting, which evaluates the expected exposure to electromagnetic energy associated with the wireless telecommunications facility. This report concludes that there are no modeled areas on any publicly accessible ground-level surface that will exceed the FCC's occupational or general public exposure limits at this site. Only areas on the lattice tower (i.e. only areas accessible to authorize personnel) in close proximity to the antennas would experience electromagnetic energy (EME) exposure exceeding the FCC's exposure limits. To ensure compliance within accessible areas near the antennas, the report specifies the need for secure site access as well as signage at the site to warn personnel when entering areas of elevated EME. The compliance requirements are included as a condition of this permit. Further, as stated in the Condition, signage will be required to be installed before a final building inspection can be scheduled. Implementation of the Condition will be expected to prevent undue exposure of persons to hazardous levels of EME and will maintain compliance with FCC EME exposure limits.

Based upon the revised plans, EME report, photo simulations, and additional documentation submitted with the application, staff has determined that the proposed project meets the requirements of this chapter.

3. *The facility or substantial change has been reviewed pursuant to all appropriate environmental laws and regulations, including the California Environmental Quality Act.*

   Project Finding: Categorical Exemption - CEQA Guidelines Section 15303(d), Existing Structures, Class 3 exemption which applies to "limited numbers of new, small facilities or structures" such as "utility extensions."

   The project will allow for the continued operation of existing AT&T Wireless Telecommunications equipment that was previously permitted on site, with equipment upgrades including the removal of six (6) existing panel antennas, the installation of 15 new panel antennas, and associated ancillary equipment. The minor equipment upgrades are categorically exempt under the Class 3 exemption because it involves only minor equipment upgrades to an existing facility providing a utility service in the project area. Therefore, the project has been appropriately reviewed under applicable environmental laws and regulations.

4. *If an environmental impact report or mitigated negative declaration was prepared for the facility or substantial change, the facility or substantial change will incorporate all mitigation measures identified in either of those documents. Each mitigation measure will be included as a term of the permit.*

   Project Finding: The project does not require preparation of either an environmental impact report or a mitigated negative declaration. The project is categorically exempt under CEQA Guidelines Section 15303(d) – which applies to "limited numbers of new, small facilities or structures" such as "utility extensions." The proposed project will allow for the continued operation of an AT&T Wireless telecommunications facility on an existing PG&E transmission tower, with minor alterations to existing equipment installed thereon. The proposed project will not disturb ecological areas of protected wildlife and plant species as the parcel is not located in an area of significant ecological resource areas as listed in the Conservation Element Figure 8-1 in the Contra Costa County General Plan. Therefore, no substantial environmental impacts are expected to result from the project there are no mitigation measures included as conditions of this permit.

5. *If the County airport land use commission reviewed and commented on the application, the facility or substantial change will incorporate each mitigation measure recommended by the commission and deemed by the Zoning Administrator to be necessary to protect public safety, health, and welfare. Each mitigation measure will be included as a term of the permit.*

   Project Finding: The project site is not within or proximate to any zones identified by the Airport Land Use Commission as an area of planning interest nor is the project located within two miles of an airport or private airstrip. Consequently, the project is not subject to review by the Airport Land Use Commission and this finding is not applicable to this approval.

6. *The applicant has provided the financial assurance required by this chapter.*

   Project Finding: The applicant provided an updated cost estimate for the removal of the facility in the event that the use is abandoned, or the land use permit expires, or is revoked, or otherwise terminated. Submittal of a surety bond (based on the provided estimate) is required as a condition of this permit.

7. *The applicant has paid all required fees and costs, including but not limited to the application fee, any required environmental review fee and any required peer review fee.*

   Project Finding: A time and materials deposit in the amount of $5,500 was submitted with this application for a Land Use Permit renewal. No additional environmental review fees are applicable to the project. Prior to the issuance of building permits, CDD staff will verify that all planning fees have been paid by the applicant prior to CDD stamp-approval of plans for the issuance of building permits.

D. California Environmental Quality Act (CEQA) Findings

The project is exempt from environmental review pursuant to CEQA Guidelines section 15303(d), which exempts, among other things, limited new, small facilities or structures, including utility extensions. The project consists of reestablishing an expired use permit for an existing communications tower, with equipment upgrades including the installation of new antennas and associated ancillary equipment for the purpose of the continued provision of a utility service by AT&T wireless. There is no substantial evidence that the project involves unusual circumstances, including future activities, resulting in, or which might reasonably result in, significant impacts which

threaten the environment. None of the exceptions in CEQA Guidelines section 15300.2 apply.

II. CONDITIONS OF APPROVAL FOR COUNTY FILE #CDLP24-02006:

Land Use Permit Approval

1. This Land Use Permit is APPROVED for the reestablishment of expired Land Use Permit #CDLP08-2065 for the continued operation of an existing communications facility by the established carrier (AT&T).

2. A Development Plan to modify Final Development Plan CDDP84-3003 to allow the construction and operation of a new Dish Wireless telecommunications facility on the subject parcel is APPROVED, subject to the conditions below.

3. The Land Use Permit/Development Plan approvals described above is granted based on the following information and documentation:

   - Land Use Permit application submitted to the Department of Conservation and Development, Community Development Division (CDD) on February 16, 2024.
   - Project plans received on February 16, 2024.
   - *Radio Frequency – Electromagnetic Energy (RF-EME) Compliance Report*, prepared by EBI Consultants, LLC, received by CDD February 16, 2024.
   - Site photo-simulations of equipment alterations, received July 23, 2024
   - Current Cost Estimate for Removal of Facility received by CDD July 23, 2024.

Building Permit

4. The applicant is advised that this approval does not constitute a building permit. Please contact the Contra Costa County Building Inspection Division at 925-655-2700 for more information on how to apply.

Initial Compliance Report

5. **Prior to CDD-stamp approval of construction plans for the issuance of building permits,** the applicant shall submit a report addressing compliance with each condition of approval, for review and approval of the CDD. The report shall list each condition followed by a description of what the applicant has provided as evidence of compliance with that condition. Unless otherwise indicated, the applicant will be required to demonstrate compliance with the conditions of this report prior to issuance of construction permits. The Zoning Administrator may reject the report if it

is not comprehensive with respect to applicable requirements for the requested permit. The deposit for review of the Compliance Report is $1,500.00; the actual fee shall be time and materials.

Permit Duration and Permit Review

6. This land use permit is granted for a period of ten (10) years and shall be administratively reviewed at five-year intervals. The applicant shall initiate the first review by submitting a statement as to the current status of the project to the CDD **no later than 5-years following the effective date of the project approval**. This review by the CDD will be for the purpose of ensuring continued compliance with the conditions of permit approval. **Non-compliance with the approved conditions and/or the ordinance code provisions after written notice thereof shall be cause for revocations proceedings**.

   For the review of existing commercial wireless communications facilities, submittal shall include photo documentation of existing conditions and equipment for comparison with the applicable approved conditions.

   The applicant is encouraged, at the time of each administrative review, to review the design of the telecommunications facility and make voluntary upgrades to the facility for the purpose of improving safety and lessening visual obtrusiveness.

   A review fee in the amount of $1,500.00 (subject to time and materials) will be filed through a Compliance Verification application to allow for review of the approved conditions.

Permittee is Responsible for Keeping CDD Informed of Party Responsible for Permit Compliance at all Times

7. The Permittee (wireless operator) is responsible for keeping the Department of Conservation and Development, Community Development Division (CDD) informed of who is responsible for maintenance of compliance with this permit and how they may be contacted (i.e., mailing and email addresses, and telephone number) at all times.

   - **Within 30 days of the effective date of this permit**, the Permittee shall provide the name of the party (carrier) responsible for permit compliance and their contact information.

   - Should the responsible party subsequently change (e.g., facility is acquired by a new carrier), within 30 days of the change, the Permittee shall issue a letter to the CDD on the name of the new party who has been assigned permit compliance

responsibility and their contact information. Failure to satisfy this condition may result in the commencement of procedures to revoke the permit.

Removal of Facility/Site Restoration

8. All structures and equipment associated with a commercial wireless communications facility shall be removed within 60 days of the discontinuance of the use, and the site shall be restored by the permittee to its original pre-development condition. In addition, the permittee shall provide the CDD with a notice of intent to vacate the site a minimum of 30 days prior to vacation.

Security to Provide for Removal of Equipment

9. **Within 60 days of the effective date of this permit or prior to CDD stamp approval of construction documents for the issuance of building permits,** whichever occurs first, the applicant or permittee shall provide bond, cash, or other surety, to the satisfaction of the CDD, for the removal of the facility in the event that the use is abandoned or the use permit expires, or is revoked, or is otherwise terminated. If the permittee does not remove any obsolete or unused facilities as described above, the financial guarantee shall be used by the County to remove any obsolete or unused facilities and to return the site to its pre-development condition.

   The financial assurance must be submitted before a permit will be issued. A financial assurance must be irrevocable and not cancelable, except by the County.

   Each form of financial assurance must remain valid for the duration of the permit and for six months following termination, cancellation, or revocation permit.

   Any unused financial guarantee shall be returned to the applicant upon termination of the use and removal of the facility, or transfer of the lease accompanied by a financial guarantee by the new lessee or owner. The amount of the security shall be based on a cost estimate provided by a contractor or other qualified professional to the satisfaction of the Zoning Administrator.

General Provisions

10. Any deviation from or substantial change beyond the limits of this permit approved under this application may require the filing and approval of a request for modification of the Land Use Permit.

11. A minor alteration to this land use permit (or collocation if CEQA environmental review of collocation for the land use permit has been completed) may be issued if

the proposed modification(s) are not considered a substantial modification as stated under federal law (Title 47, Section 1.40001).

A minor alteration (or a collocation) has a term that is the shorter of the following:

- 10 years: or,
- The duration, including any renewal period, of the permit that authorizes the existing facility on which the new facility will be collocated or on which the minor alteration will occur.

12. The conditions contained herein shall be accepted by the applicant, their agents, lessees, survivors or successors for continuing obligation.

13. At all times the facility shall comply with applicable rules, regulations and standards of the FCC and other agencies having jurisdiction, and any other applicable Federal, State, and County laws and regulations.

14. Facilities shall be operated in such a manner as not to contribute to ambient RF/EMF emissions in excess of then-current FCC adopted RF/EMF emission standards. Within 15 days of new antennas being installed, the applicant shall take RF power density measurements with the operating antennas to verify the level reported in the RF report and to ensure that the FCC public exposure level is not exceeded in any public accessible area. This measurement shall be taken again if any equipment is replaced or added. Verification of all RF power density measurements under this condition shall be submitted to CDD for review and to confirm that the requirements of the Ordinance Code and this permit have been met. The recommendations within the approved RF Report shall be noted on the plans for a building permit and are required to be implemented on site prior to final building inspection.

15. The equipment shall be maintained in good condition over the term of the permit. This shall include keeping the structures graffiti-free.

16. Antennas, towers, cabinets, and mountings shall not be used for advertising.

17. Access to the antenna array shall be restricted and equipment cabinets shall be kept locked, except when personnel are present, in order to restrict access to the equipment.

18. No lights or beacons may be installed on any antenna or antenna support structure, unless lights or beacons are required by a state or federal agency having jurisdiction over the antenna or antenna support structure, such as the California Public Utilities Commission, Federal Communications Commission, or Federal Aviation

Administration, or if lights or beacons are recommended by the County Airport Land Use Commission.

19. A facility, all fences and walls surrounding a facility, and all other fixtures and improvements on a facility site must be repainted as often as necessary to prevent fading, chipping, or weathering of paint.

Exterior Noise

20. **In the event that a minor alteration to this facility involving noise-generating equipment is proposed,** the applicant shall submit evidence for review and approval of the CDD that the wireless telecommunications facility meets acceptable exterior noise level standards as established in the Noise and Land Use Compatibility Guidelines contained in the Noise Element of the County General Plan. The evidence can either be theoretical calculations for identical equipment or noise monitoring data recorded on the site.

Frequency Interference

21. No facility may be operated at a frequency that will interfere with an emergency communication system or 911 system, including any regional emergency communication system.

External Appearance

22. All antennas, monopoles, and associated equipment shall be painted to match the existing tower (or the sky as appropriate) and shall be maintained for the life of the facility. All exterior portions of the poles shall be treated with materials that have a non-reflective finish (less than 55 percent), except as otherwise required by the terms of the FCC Antenna Structure Registration applicable to the facility. Color photographs showing the as-built condition shall be submitted for review of CDD staff to verify compliance with this Condition of Approval **within 30 days of the installation of new equipment on the lattice tower**.

23. The external appearance of the wireless telecommunication facility shall be maintained throughout the life of the facility. The monopole and external accessory equipment must be repainted as often as necessary to prevent fading, chipping, or weathering of paint. The external non-reflective earth-tone appearance of the equipment shelter shall be continuously maintained. The chain link fence shall be continuously maintained. Paint materials shall have a non-reflective finish (less than 55 percent), except as otherwise required by the terms of the FCC Antenna Structure Registration applicable to the facility.

In the event that a minor alteration to the facility is proposed, or upon request by County staff, color photographs showing the as-built condition shall be submitted for review of CDD staff to verify compliance with this condition of approval.

24. The compliance recommendations (sign installation, restricted antenna access) of *Radio Frequency – Electromagnetic Energy (RF-EME) Compliance Report* prepared by EBI Consulting, dated on January 29, 2024, are required to be implemented by the applicant. **Prior to final building inspection**, the applicant shall submit color photographs showing the installed signs to the CDD for review and approval.

Work Restrictions – All construction activity throughout the life of the permit shall comply with the following requirements, which shall be included on all sets of construction documents.

25. The applicant shall make a good faith effort to minimize project-related disruptions to adjacent properties, and to other uses on the site. This shall be communicated to project-related contractors.

26. The project sponsor shall require their contractors and subcontractors to fit all internal combustion engines with mufflers which are in good condition and shall locate stationary noise-generating equipment such as air compressors and concrete pumps as far away from existing residences as possible.

27. Transportation of heavy equipment and trucks shall be limited to weekdays between the hours of 9:00 A.M. and 4:00 P.M. and prohibited on Federal and State holidays.

28. The site shall be maintained in an orderly fashion. Following the cessation of construction activity; all construction debris shall be removed from the site.

29. A publicly visible sign shall be posted on the property with the telephone number and person to contact regarding construction-related complaints. This person shall respond and take corrective action within 24 hours. The CDD phone number shall also be visible to ensure compliance with applicable regulations.

30. Non-emergency maintenance, construction and other activities on the site related to this use are restricted to the hours of 8:00 A.M. to 5:00 P.M., Monday through Friday, and shall be prohibited on State and Federal holidays on the calendar dates that these holidays are observed by the State or Federal government as listed below:

    New Year's Day (State and Federal)
    Birthday of Martin Luther King, Jr. (State and Federal)

Washington's Birthday (Federal)
Lincoln's Birthday (State)
President's Day (State)
Cesar Chavez Day (State)
Memorial Day (State and Federal)
Juneteenth National Independence Holiday (Federal)
Independence Day (State and Federal)
Labor Day (State and Federal)
Columbus Day (Federal)
Veterans Day (State and Federal)
Thanksgiving Day (State and Federal)
Day after Thanksgiving (State)
Christmas Day (State and Federal)

For specific details on the actual days and dates that these holidays occur, please visit the following websites:

Federal Holidays: www.federalreserve.gov/aboutthefed/k8.htm
California Holidays: http://www.sos.ca.gov/state-holidays/

Application Processing Fees

31. The Land Use Permit application was subject to an initial deposit of $5,500. The application is subject to time and material costs if the application review expenses exceed the initial deposit. Any additional fee due must be paid prior to an application for a grading or building permit, or 60 days of the effective date of this permit, whichever occurs first. The fees include costs through permit issuance and final file preparation. Pursuant to Contra Costa County Board of Supervisors Resolution Number 2019/553, where a fee payment is over 60 days past due, the Department of Conservation and Development may seek a court judgement against the applicant and will charge interest at a rate of ten percent (10%) from the date of judgement. The applicant may obtain current costs by contacting the project planner. A bill will be mailed to the applicant shortly after permit issuance in the event that additional fees are due.

Indemnity

32. To the fullest extent permitted by law, the applicant and/or permittee shall defend, indemnify, and hold harmless the county, its officers, employees, contractors, consultants, and volunteers from and against: (1) All claims, losses, damages (including injury or death), liabilities, suits, costs, and expenses, including reasonable

attorney's fees, in any way connected to or arising from the design, construction, installation, use, maintenance, or operation of the facility; and (2) all claims, actions, or proceedings to attack, set aside, void, or annul any decision to approve the application and issue a land use permit or renewed permit to the applicant, or any other discretionary action of the County related to the issuance of that permit.

ADVISORY NOTES

THE FOLLOWING INFORMATION DOES NOT CONSTITUTE CONDITIONS OF APPROVAL. IT IS PROVIDED TO ALERT THE APPLICANT TO LEGAL REQUIREMENTS OF THE COUNTY AND OTHER PUBLIC AGENCIES TO WHICH THIS PROJECT MAY BE SUBJECT.

A. **NOTICE OF NINETY (90) DAY OPPORTUNITY TO PROTEST FEES, DEDICATIONS, RESERVATIONS, OR OTHER EXACTIONS PERTAINING TO THE APPROVAL OF THIS PERMIT.**

Pursuant to Government Code Section 66000, et seq., the applicant has the opportunity to protest fees, dedications, reservations or exactions required as part of this project approval. To be valid, a protest must be in writing pursuant to Government Code Section 66020 and must be delivered to the Community Development Division within a ninety (90) day period that begins on the date that this project is approved. If the 90th day falls on a day that the Community Development Division is closed, then the protest must be submitted by the end of the next business day.

B. Prior to applying for a building permit, the applicant may wish to contact the following agencies to determine if additional requirements and/or additional permits are required as part of the proposed project:

- County Building Inspection Division
- County Health Services Dept., Environmental Health Division
- San Ramon Valley Fire Protection District
- Central Contra Costa Sanitary District
- East Bay Municipal Utility District
- Federal Communications Commission

1985 ROLL- POR. TRACT 6432 M.B. 286-7
1- 79 L.S.M. 37 5-2-86

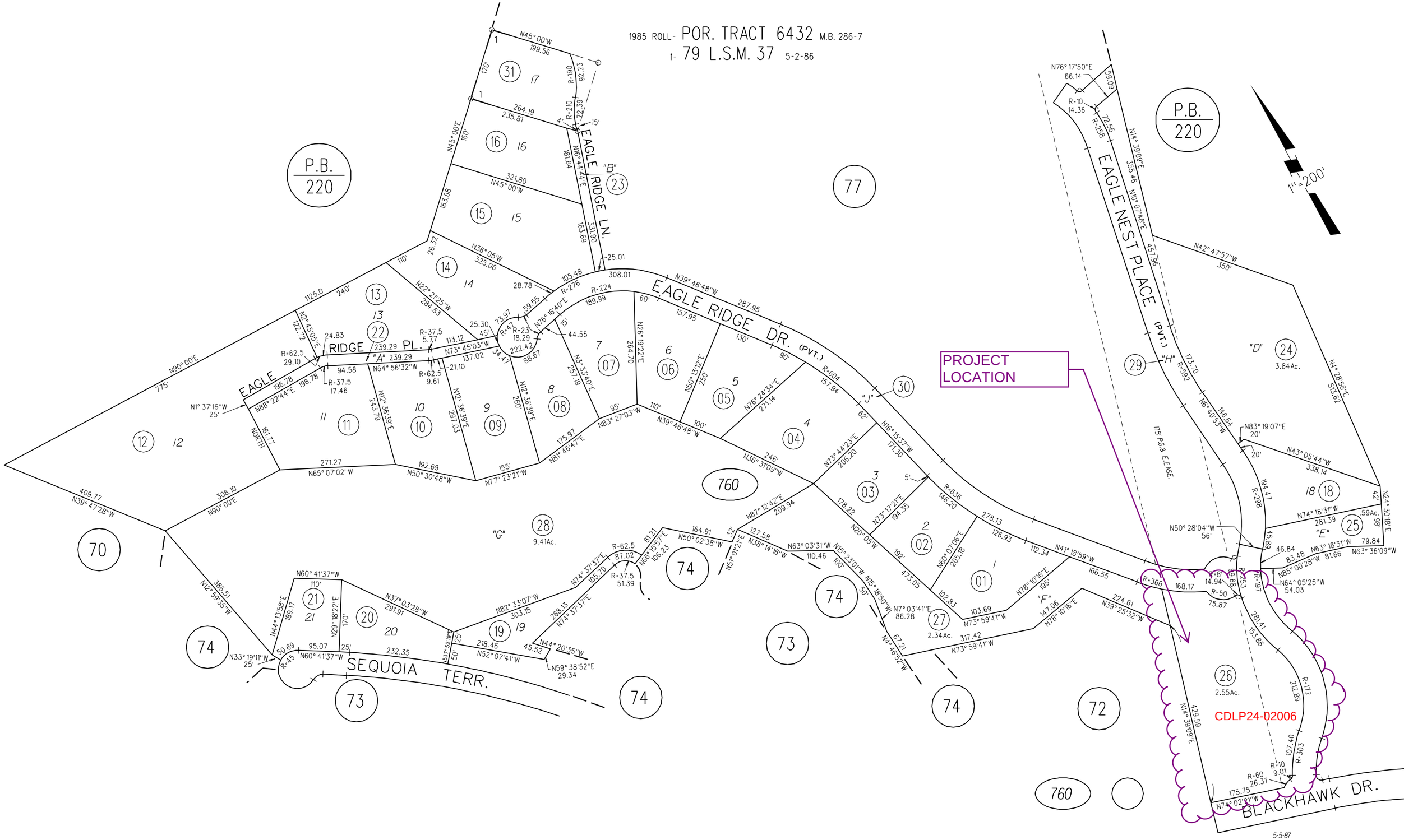

5-5-87

FM.203-8,70,74 & 220-11,12 2-1-85
ASSESSOR'S MAP
BOOK 203 PAGE 76
CONTRA COSTA COUNTY,CA

General Plan: PR, Parks & Recreation

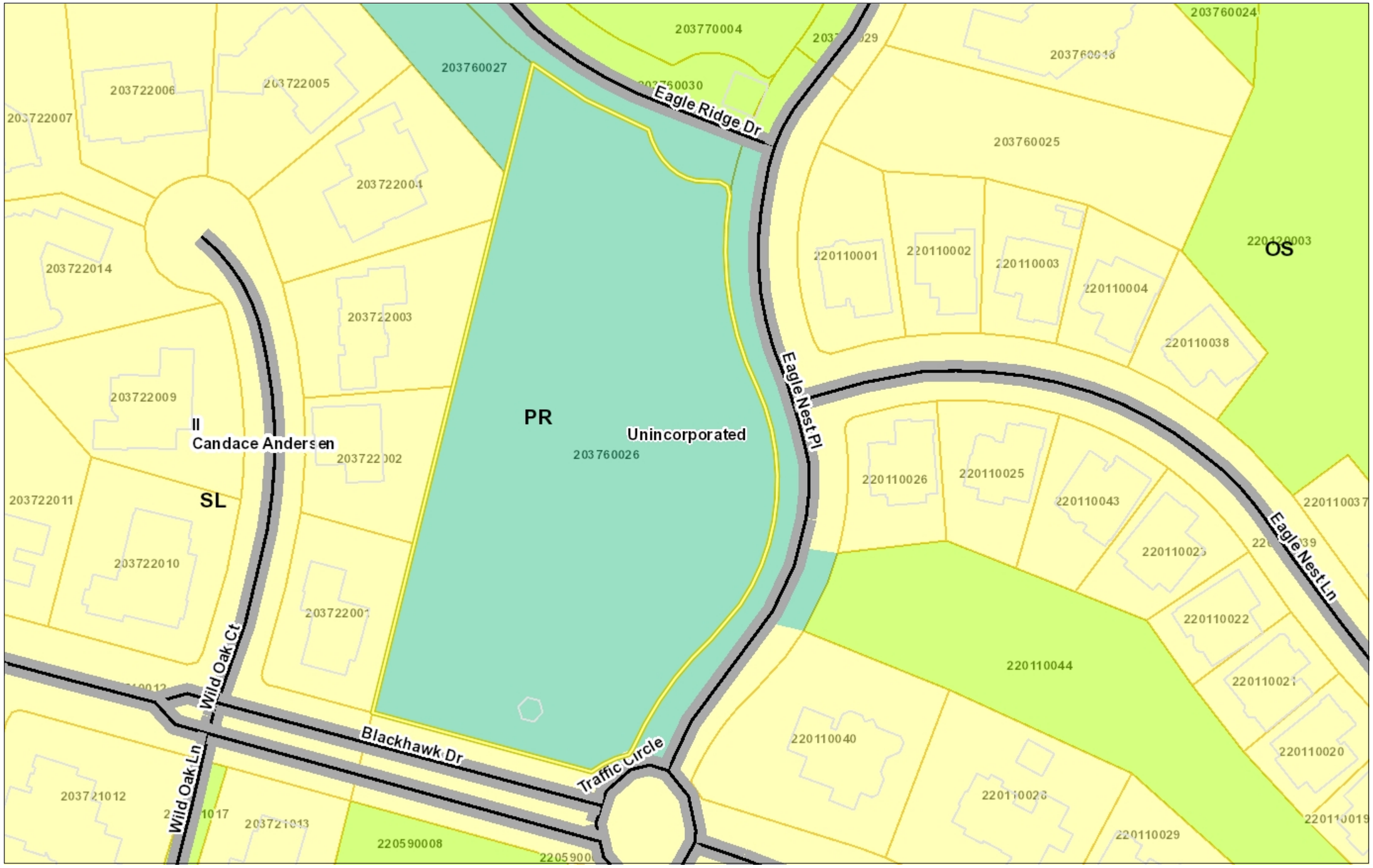

Legend

- Building Outlines
- City Limits
- Unincorporated
- Highways
- Highways Bay Area
- Streets
- General Plan
  - SV (Single Family Residential - Ver
  - SL (Single Family Residential - Low
  - SM (Single Family Residential - Me
  - SH (Single Family Residential - Hig
  - ML (Multiple Family Residential - Lo
  - MM (Multiple Family Residential - M
  - MH (Multiple Family Residential - H
  - MV (Multiple Family Residential - V
  - MS (Multiple Family Residential - V
  - CC (Congregate Care/Senior Housi
  - MO (Mobile Home)
  - M-1 (Parker Avenue Mixed Use)
  - M-2 (Downtown/Waterfront Rodeo I
  - M-3 (Pleasant Hill BART Mixed Use
  - M-4 (Willow Pass Road Mixed Use)
  - M-5 (Willow Pass Road Commercia
  - M-6 (Bay Point Residential Mixed U
  - M-7 (Pittsburg/Bay Point BART Sta
  - M-8 (Dougherty Valley Village Cent
  - M-9 (Montalvin Manor Mixed Use)
  - M-10 (Willow Pass Business Park M
  - M-11 (Appian Way Mixed Use)
  - M-12 (Triangle Area Mixed Use)
  - M-13 (San Pablo Dam Road Mixed
  - M-14 (Heritage Mixed Use)
  - CO (Commercial)
  - OF (Office)
  - BP (Business Park)
  - LI (Light Industry)
  - HI (Heavy Industry)
  - AL, OIBA (Agricultural Lands & Off
  - CR (Commercial Recreation)

1: 1,128

0.0 0 0.02 0.0 Miles

WGS_1984_Web_Mercator_Auxiliary_Sphere

This map is a user generated static output from an Internet mapping site and is for reference only. Data layers that appear on this map may or may not be accurate, current, or otherwise reliable.

THIS MAP IS NOT TO BE USED FOR NAVIGATION

Notes

Contra Costa County -DOIT GIS

Zoning: P-1

Legend

- Building Outlines
- City Limits
- Unincorporated
- Highways
- Highways Bay Area
- Streets
- Zoning
  - R-6 (Single Family Residential)
  - R-6, -FH -UE (Flood Hazard and A
  - R-6 -SD-1 (Slope Density Hillside D
  - R-6 -TOV -K (Tree Obstruction and
  - R-6, -UE (Urban Farm Animal Exclu
  - R-6 -X (Railroad Corridor Combinin
  - R-7 (Single Family Residential)
  - R-7 -X (Railroad Corridor Combinin
  - R-10 (Single Family Residential)
  - R-10, -UE (Urban Farm Animal Exc
  - R-12 (Single Family Residential)
  - R-15 (Single Family Residential)
  - R-20 (Single Family Residential)
  - R-20, -UE (Urban Farm Animal Exc
  - R-40 (Single Family Residential)
  - R-40, -FH -UE (Flood Hazard and A
  - R-40, -UE (Urban Farm Animal Exc
  - R-65 (Single Family Residential)
  - R-100 (Single Family Residential)
  - D-1 (Two Family Residential)
  - D-1 -T (Transitional Combining Dist
  - D-1, -UE (Urban Farm Animal Exclu
  - M-12 (Multiple Family Residential)
  - M-12 -FH (Flood Hazard Combining
  - M-17 (Multiple Family Residential)
  - M-29 (Multiple Family Residential)
  - F-R (Forestry Recreational)
  - F-R -FH (Flood Hazard Combining
  - F-1 (Water Recreational)
  - F-1 -FH (Flood Hazard Combining D
  - A-2 (General Agriculture)
  - A-2, -BS (Boat Storage Combining

1: 1,128

0.0 0 0.02 0.0 Miles

WGS_1984_Web_Mercator_Auxiliary_Sphere

This map is a user generated static output from an Internet mapping site and is for reference only. Data layers that appear on this map may or may not be accurate, current, or otherwise reliable.

THIS MAP IS NOT TO BE USED FOR NAVIGATION

Notes

Contra Costa County -DOIT GIS

at&t

Your world. Delivered.

CCL04753 - 2022 5G NR RADIO

PA#: MRSFR085447 - 5G NR ACTIVATION
PA#: MRSFR086839 PTN#: 3701A10X7J - 4TXRX ANTENNA RETROFIT
PA#: MRSFR086137 PTN#: 3701A10Y2V - BBU RECONFIGURATION
PA#: MRSFR086124 PTN#: 3701A10YRL - 5G NR 1SR CBAND
PA#: MRSFR086893 PTN#: 3701A10YK3 - 5G NR 1SR CBAND

FA#: 10070274

BLACKHAWK

CORNER OF BLACKHAWK AND EAGLES NEST
DANVILLE, CALIFORNIA 94506
MODIFICATION OF TELECOMMUNICATION SITE

RECEIVED on 02/16/2024 CDLP24-02006
By Contra Costa County
Department of Conservation and Development

APPLICABLE CODES

ALL WORK SHALL COMPLY WITH THE FOLLOWING APPLICABLE CODES:

2022 CALIFORNIA BUILDING CODE
2022 CALIFORNIA GREEN BUILDING STANDARDS CODE
2022 CALIFORNIA ELECTRICAL CODE
2022 CALIFORNIA MECHANICAL CODE
2022 CALIFORNIA PLUMBING CODE
2022 CALIFORNIA FIRE CODE
2022 CALIFORNIA ENERGY CODE

IN THE EVENT OF CONFLICT, THE MOST RESTRICTIVE CODE SHALL PREVAIL

GENERAL NOTES

THE FACILITY IS UNMANNED AND NOT FOR HUMAN HABITATION.
HANDICAPPED ACCESS REQUIREMENTS ARE NOT REQUIRED
IN ACCORDANCE WITH THE 2022 CALIFORNIA BUILDING CODE. A TECHNICIAN WILL VISIT THE SITE AS REQUIRED FOR ROUTINE MAINTENANCE. THE PROJECT WILL NOT RESULT IN ANY SIGNIFICANT DISTURBANCE OR EFFECT ON DRAINAGE; NO SANITARY SEWER SERVICE, POTABLE WATER, OR TRASH DISPOSAL IS REQUIRED AND NO COMMERCIAL SIGNAGE IS PROPOSED.

SITE INFORMATION

APPLICANT:	AT&T MOBILITY 5001 EXECUTIVE PARKWAY SAN RAMON, CA 94583
PROPERTY OWNER:	BLACKHAWK HOMEOWNERS ASSOCIATION 4125 BLACKHAWK PLAZA CIRCLE DANVILLE, CALIFORNIA 94506
STRUCTURE TYPE:	LATTICE TOWER
TOWER HEIGHT:	131'-0"
ASSESSORS PARCEL NUMBER:	203-760-026
LATITUDE:	37° 49' 02.74" N 37.81743°
LONGITUDE:	121° 54' 10.40" W -121.90289°
LAT/LONG TYPE:	NAD-83
ELEVATION:	±902.2' AMSL
EXISTING ZONING:	P-1
PROPOSED PROJECT AREA:	NO INCREASE IN S.F.
TYPE OF CONSTRUCTION:	TYPE V-B
OCCUPANCY GROUP:	U
JURISDICTION:	CONTRA COSTA COUNTY

PROJECT TEAM

CLIENT REPRESENTATIVE:
MASTEC NETWORK SOLUTIONS
3443 AIRPORT RD
SACRAMENTO, CA 95834
CONTACT: CHRISTOPHER DOWELL
PH: (415) 230-9185
EMAIL: Christopher.Dowell@mastec.com

SCOPING ENGINEER:
MASTEC NETWORK SOLUTIONS
3443 AIRPORT RD
SACRAMENTO, CA 95834
CONTACT: SHAWN MARTIN
EMAIL: SHAWN.MARTIN@MASTEC.COM

ENGINEERING:
MASTEC NETWORK SOLUTIONS
125 KLUG CIRCLE
CORONA, CA 92880
CONTACT: RAPHAEL MOHAMED
PH: (919) 674-5895
EMAIL: Raphael.Mohamed@mastec.com

CONSTRUCTION:
MASTEC NETWORK SOLUTIONS
3443 AIRPORT RD
SACRAMENTO, CA 95834
CONTACT: BEN BRODERICK
PH: (206) 303-9666
EMAIL: Benjamin.Broderick@mastec.com

RF ENGINEER:
AT&T MOBILITY
5001 EXECUTIVE PKWY 4W750S
SAN RAMON, CA 94583
CONTACT: SAGAR BONDE
PH: (323) 547-5845
EMAIL: sb970r@att.com

SITE ACQUISITION:
MASTEC NETWORK SOLUTIONS
3443 AIRPORT RD
SACRAMENTO, CA 95834
CONTACT: JAMES PHILLIPS
PH: (530) 333-5786
EMAIL: James.Phillips@mastec.com

LOCATION MAP

VICINITY MAP

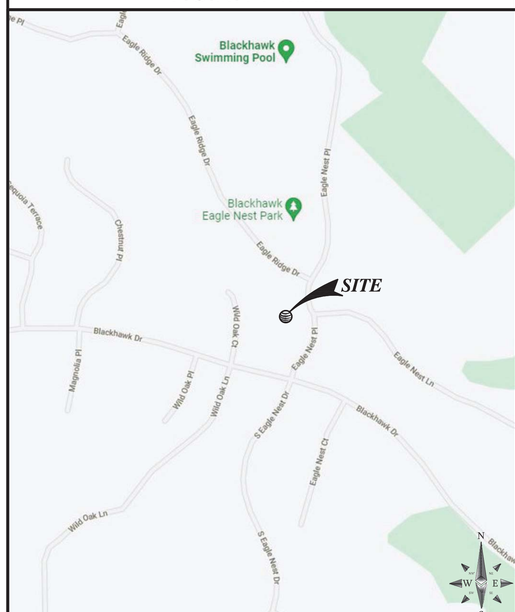

LOCAL MAP

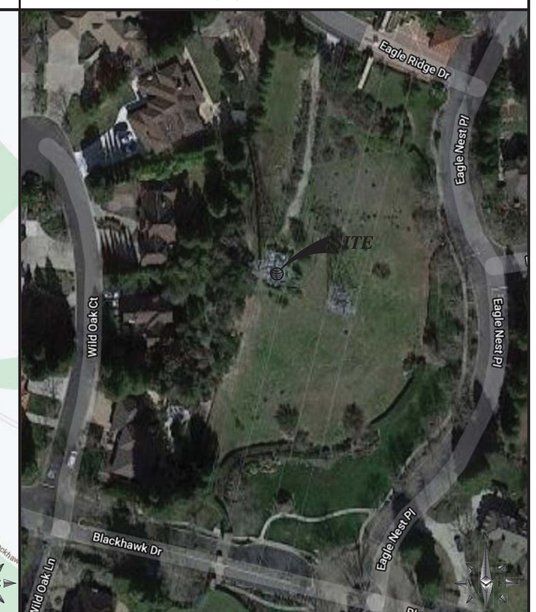

DRIVING DIRECTIONS

DIRECTIONS FROM: 5001 EXECUTIVE PARKWAY, SAN RAMON, CALIFORNIA 94583

1. HEAD NORTH AND TURN RIGHT TOWARD EXECUTIVE PKWY. TURN RIGHT ONTO EXECUTIVE PKWY. (0.4 MILES)
2. TURN LEFT ONTO CAMINO RAMON. (0.3 MILES)
3. TURN RIGHT ONTO NORRIS CANYON RD. (0.3 MILES)
4. USE THE LEFT 2 LANES TO TURN LEFT ONTO ALCOSTA BLVD. (0.4 MILES)
5. USE THE RIGHT 2 LANES TO TURN RIGHT ONTO CROW CANYON RD. (3.3 MILES)
6. CONTINUE STRAIGHT PAST CITI ONTO BLACKHAWK RD. (1 MILES)
7. TURN RIGHT ONTO BLACKHAWK DR. (1.2 MILES)
8. TURN LEFT ONTO WILD OAK CT. DESTINATION WILL BE ON THE RIGHT. (279 FEET).

PROJECT DESCRIPTION

AT&T MOBILITY PROPOSES TO MODIFY AN EXISTING UNMANNED WIRELESS COMMUNICATIONS FACILITY. THIS MODIFICATION WILL CONSIST OF THE FOLLOWING:

LATTICE TOWER – ABOVE CONDUCTOR:
- REMOVE (6) EXISTING PANEL ANTENNAS AT POS. 1 AND 2 (2 PER SECTOR, 6 TOTAL)
- REMOVE (6) EXISTING 1-5/8" U850 COAX MAINLINES
- RELOCATE (3) EXISTING MOUNTING FRAMES FROM 124'-0" RAD TO 121'-10" RAD (TO BE DONE BY PG&E)
- RELOCATE (3) EXISTING 4415 B25 FROM 124'-0" RAD TO 121'-10" RAD (1 PER SECTOR)
- RELOCATE (3) EXISTING 4426 B66 FROM 124'-0" RAD TO 121'-10" RAD (1 PER SECTOR)
- RELOCATE (2) EXISTING 4478 B14 FROM 124'-0" RAD TO 121'-10" RAD (1 PER SECTOR A & C)
- INSTALL NEW FRAMES AT 128'-6" RAD-CENTER (TO BE DONE BY PG&E)
- INSTALL (3) NEW PANEL ANTENNAS AT POS. 1 AT 128'-6 RAD-CENTER (1 PER SECTOR, 3 TOTAL)
- INSTALL (6) NEW PANEL ANTENNAS AT AT POS. 2 AND 3 AT 121'-10" RAD-CENTER (2 PER SECTOR, 6 TOTAL)
- INSTALL (3) NEW DIPLEXERS NEAR POS. 3 ANTENNA

LATTICE TOWER – BELOW CONDUCTOR:
- INSTALL (3) NEW B144796 H-FRAMES WITH (3) NEW B139409 AND (3) NEW B1709 BRACKETS AT 36'-0" RAD-CENTER ON B/C/D LEGS
- INSTALL (3) NEW AIR6449 ANTENNAS AT 36'-0" RAD-CENTER @ NEW P4 (1 PER SECTOR, 3 TOTAL)
- INSTALL (3) NEW AIR6419 ANTENNAS AT 36'-0" RAD-CENTER @ NEW P5 (1 PER SECTOR, 3 TOTAL)
- INSTALL (1) NEW DC9 SQUID ON (1) NEW B141415 MOUNT AT ±36'-0" RAD-CENTER ON C LEG BEHIND AIR ANTENNAS
- INSTALL (1) NEW B144796 H-FRAME WITH (1) NEW B139409 AND (1) NEW B1709 BRACKET AT 28'-0" RAD-CENTER FOR RADIOS ON C LEG
- INSTALL (3) NEW 4478 B12'S AT 28'-0" RAD-CENTER
- INSTALL (3) 6AWG TRUNKS
- INSTALL (1) 24-PAIR FIBER TRUNK

SHELTER WORK:
- REMOVE (3) EXISTING RRUS-B12 ON EXISTING H-FRAME (1 PER SECTOR, 3 TOTAL)
- INSTALL (1) NEW DC12 ON EXISTING H-FRAME IN FOOTPRINT OF RRUS-11 B12
- INSTALL (1) NEW 155AH BATTERY STRING IN EXISTING BBU (5 STRINGS TOTAL)
- INSTALL (4) NEW INFINITY -48 RECTIFIERS (8 RECTIFIERS TOTAL)
- INSTALL (1) NEW 6673 IN FLX-21 PURCELL CABINET

FINAL (1) 5216 + (2) XMU + (1) 6630 (MM) + (1) 6673

* WEED ABATEMENT/FIRE BREAK TO BE ASSESSED DURING PRECON
* IF THERE IS ANY DISCREPANCY FOUND AT CI025 ON THE RECTIFIER/BATTERY COUNT IN RELATION TO THE SPCT PLEASE CONTACT BERNARD NAIDU IMMEDIATELY; SEE SHEET E-1

REFERENCE RFDS ID# 4495866, VERSION 3.00, DATED 01/24/2024

DRAWING INDEX

APPROVALS

THE FOLLOWING PARTIES HEREBY APPROVE AND ACCEPT THESE DOCUMENTS & AUTHORIZE THE SUBCONTRACTOR TO PROCEED WITH THE CONSTRUCTION DESCRIBED HEREIN. ALL DOCUMENTS ARE SUBJECT TO REVIEW BY THE LOCAL BUILDING DEPARTMENT & MAY IMPOSE CHANGES OR MODIFICATIONS.

90% CDS _____ DATE: _____
100% CDS _____ DATE: _____
100% CDS WITH STRUCTURALS _____ DATE: _____
CONSTRUCTION: _____ DATE: _____
RF ENGINEER _____ DATE: _____
SCOPING ENGINEER _____ DATE: _____
PROJECT MANAGER: _____ DATE: _____

SCALE

THE DRAWING SCALES SHOWN IN THIS SET REPRESENT THE CORRECT SCALE ONLY WHEN THESE DRAWINGS ARE PRINTED IN A 11"X17" OR 24"X36" FORMAT.

811 **USA NORTH**
Know what's below.
Call before you dig.
Call Two Working Days Before You Dig!
811 / 800-227-2600
usanorth.org

at&t Mobility

MasTec Network Solutions
125 KLUG CIRCLE
CORONA, CALIFORNIA 92880

FA CODE:	FA # 10070274
DRAWN BY:	J.C
JOB #:	30097

REV	DATE	DESCRIPTION
1	02/05/2024	100% CD'S - S&S
0	06/27/23	100% CD'S FOR REVIEW
E	04/24/23	95% CD'S UPDATE-RAD CHANGE
D	01/30/23	95% CD'S UPDATE
C	04/28/22	95% CD'S UPDATE
B	03/01/22	90% CD'S UPDATE
A	01/27/22	90% CD'S FOR REVIEW

REGISTERED PROFESSIONAL ENGINEER
JOSEPH RUSSELL KING
C93286
CIVIL
STATE OF CALIFORNIA

Digitally signed by Joseph Russell King
Date: 2024.02.05 16:59:45-05'00'

CCL04753
BLACKHAWK
CORNER OF BLACKHAWK AND EAGLES NEST
DANVILLE, CALIFORNIA 94506
FA NUMBER
10070274

SHEET TITLE
TITLE SHEET

SHEET NUMBER
T-1

LIMITS OF LIABILITY:

MNS HAS MADE EVERY EFFORT TO CREATE COMPLETE AND ACCURATE CONTRACT DOCUMENTS WITH THE BEST INFORMATION AVAILABLE AT THE TIME OF THEIR COMPLETION. CONTRACTORS ARE CAUTIONED THAT MINOR OMISSIONS OR ERRORS IN THE CONTRACT DOCUMENTS MAY OCCUR AND SHALL NOT EXCUSE THE CONTRACTOR FROM COMPLETING THE PROJECT AND IMPROVEMENTS IN ACCORDANCE WITH THE INTENT OF THE DOCUMENTS. REFERENCE ADMINISTRATIVE REQUIREMENTS.

CONTRACT DOCUMENTS:

1. THE CONTRACT DOCUMENTS INCLUDE THE AGENCY APPROVED PROJECT SPECIFICATIONS, PLANS, AND THEIR LATEST REVISIONS, ADDENDA, AND CLARIFICATIONS. THE CONTRACT DOCUMENTS MAY ALSO INCLUDE NETWORK CARRIER STANDARDS FOR INSTALLATION OF TELECOMMUNICATIONS EQUIPMENT.
2. THE CONTRACTOR SHALL KEEP A MINIMUM OF ONE SET OF CONTRACT DOCUMENTS ON FILE IN THE PROJECT OFFICE AT THE JOB SITE. COPIES OF THE PROJECT DOCUMENTS USED BY SITE STAFF SHALL BE UP TO DATE WITH THE PROJECT OFFICE COPY.
3. THE CONTRACTOR SHALL NOTIFY THE PROJECT TEAM OF ANY ERRORS, OMISSIONS, AND INCONSISTENCIES FOUND IN THE CONTRACT DOCUMENTS. THE NOTIFICATION SHALL BE GIVEN BOTH VERBALLY AND IN WRITING WITHIN 24 HOURS OF DISCOVERY.
4. IF AN ERROR OR OMISSION IN THE PROJECT DOCUMENTS REQUIRES RECTIFICATION, THE CONTRACTOR SHALL SUBMIT A PROPOSAL TO THE PROJECT TEAM TO RECTIFY THE ISSUE. THE PROPOSAL MUST BE APPROVED PRIOR TO WORK.
5. THE CONTRACT DRAWINGS ARE PREPARED TO SCALE WITH THE BEST KNOWLEDGE OF THE SITE GIVEN TO MNS. WHERE DIMENSIONS ARE NOT SHOWN IN THE DRAWINGS, THE CONTRACTOR SHOULD CLARIFY WITH THE PROJECT TEAM WHEN THE INFORMATION IS CRITICAL TO PROPER INSTALLATION.
6. THE CONTRACTOR SHALL DOCUMENT ALL CHANGES AND SUBSTITUTIONS ON THE PROJECT OFFICE COPY OF THE CONTRACT DOCUMENTS.
7. WHEN FABRICATION OF STRUCTURAL ITEMS ARE REQUIRED, IT MAY BE NECESSARY TO SUBMIT SHOP DRAWINGS FOR REVIEW BY MNS. SEE STRUCTURAL NOTES.
8. DEFERRED SUBMITTALS ARE REQUIRED FOR MATERIALS TO BE PROVIDED BY THE CONTRACTOR. WHERE MATERIALS IN THE PLANS ARE DESIGNATED AS PROVIDED BY CONTRACTOR, THE CONTRACTOR SHALL SUBMIT THE PREFERRED MATERIAL TO THE PROJECT TEAM FOR REVIEW AND APPROVAL PRIOR TO WORK.

ADMINISTRATIVE REQUIREMENTS:

1. ALL ACCESS TO THE SITE, FOR SITE VISITS AND CONSTRUCTION, SHALL BE DURING 7:00–3:30 AND MUST BE COORDINATED WITH THE PROPERTY OWNER.
2. AT THE COMPLETION OF THE PROJECT, THE AT&T PROPERTY MANAGER AND THE DISTRICT WILL DO A FINAL WALK THROUGH AND APPROVE ALL WORK PRIOR TO ACCEPTANCE.
3. THE PROPERTY OWNER WILL RECEIVE ONSET OF FULL SIZE AND 11X17 ASBUILTS AT THE COMPLETION OF THE PROJECT.
4. THE CONTRACTOR IS RESPONSIBLE FOR OBTAINING ALL PERMITS REQUIRED (INCLUDING FEES) TO COMPLETE THE WORK DESCRIBED BY THE CONSTRUCTION DOCUMENTS.
5. PRIOR TO BIDDING, THE CONTRACTOR IS RESPONSIBLE FOR REVIEW OF THE PROJECT SITE AND CONTRACT DOCUMENTS TO UNDERSTAND THE DESIGN AND CONDITIONS AFFECTING THE WORK TO BE PERFORMED. ANY ERRORS, OMISSIONS, AND DISCREPANCIES MUST BE SUBMITTED TO THE PROJECT TEAM VERBALLY AND IN WRITING.
6. THE CONTRACTOR SHALL PROVIDE A WARRANTY FOR WORK FOR A PERIOD OF ONE YEAR. THE CONTRACTOR SHALL BE RESPONSIBLE FOR AND SHALL REMEDY ALL FAULTY, INFERIOR, AND/OR IMPROPER MATERIALS, DAMAGED GOODS, AND/OR FAULTY WORKMANSHIP. ALL ROOFING AND WATERPROOFING MUST BE WARRANTED FOR A PERIOD OF TWO YEARS. THE PERIOD BEGINS AT SUBSTANTIAL COMPLETION OF THE PROJECT.
7. THE CONTRACTOR SHALL PROVIDE A COPY OF LICENSE AND INSURANCE TO THE TELECOMMUNICATIONS CARRIER.

SITE SAFETY:

1. THE CONTRACTOR SHALL PROVIDE OSHA COMPLIANT PROTECTION FOR THE SAFETY OF THE SITE STAFF AT ALL TIMES DURING THE CONSTRUCTION OF THE PROJECT.
2. CONTRACTOR SHALL KEEP GENERAL WORK AREA CLEAN AND HAZARD FREE DURING CONSTRUCTION. SITE SHALL BE LEFT IN CLEAN CONDITION AND FREE FROM DIRT AND DEBRIS. SURFACES SHALL BE CLEANED OF GREASE, PAINT, OR OTHER MATERIALS NOT SPECIFIED IN THE CONSTRUCTION DOCUMENTS.
3. THE CONTRACTOR IS TO PROVIDE PROTECTION FOR ADJOINING PROPERTIES FROM PHYSICAL HARM, NOISE, DUST, DIRT, AND FIRE AS REQUIRED BY THE GOVERNING AGENCIES. THE CONTRACTOR IS RESPONSIBLE FOR REPAIR OF ANY DAMAGE.
4. THE CONTRACTOR IS RESPONSIBLE FOR THE SECURITY OF THE PROJECT SITE AREA.
5. WHERE WORK REQUIRES OPEN HAZARDS TO SITE STAFF, THE HAZARD SHALL BE TEMPORARILY MITIGATED TO OSHA STANDARD UNTIL THE HAZARD IS CLOSED.
6. SEE STRUCTURAL NOTES.

UTILITY REQUIREMENTS:

1. THE CONTRACTOR IS RESPONSIBLE FOR COORDINATING WITH UTILITY AGENCIES PRIOR TO WORK WITH UTILITIES.
2. CONTRACTOR TO LOCATE ALL UTILITIES PRIOR TO WORK.
3. CONTRACTOR TO PROTECT, REPLACE AND/OR REROUTE ANY EXISTING UTILITIES ENCOUNTERED DURING THE COURSE OF WORK.

SPECIAL CONSIDERATIONS FOR WEATHERPROOFING:

1. ALL PENETRATIONS TO EXISTING STRUCTURES MUST BE SEALED WITH APPROVED WEATHERPROOFING. IF WEATHERPROOFING IS OMITTED, CONTACT THE PROJECT TEAM FOR CLARIFICATION OR PROVIDE A WEATHERPROOFING PROPOSAL FOR APPROVAL.
2. CONTRACTOR SHALL COORDINATE WITH OWNER AND THE EXISTING ROOFING CONTRACTOR OF RECORD FOR ANY AUGMENTATION TO THE ROOF MEMBRANE, AND HAVING THE WORK GUARANTEED UNDER THE ROOFING CONTRACTOR'S EXISTING WARRANTY.

WORK REQUIREMENTS:

1. ALL WORK MUST BE PERFORMED DURING THE OWNERS PREFERRED HOURS.
2. THE CONTRACTOR SHALL BE SOLELY RESPONSIBLE FOR ALL CONSTRUCTION MEANS, METHODS, TECHNIQUES, SEQUENCES, AND PROCEDURES FOR COORDINATING ALL PORTIONS OF THE WORK UNDER THE CONTRACT.
3. ALL WORK PERFORMED ON THE PROJECT SHALL BE IN ACCORDANCE WITH ALL APPLICABLE CODES AND STANDARDS. SEE STRUCTURAL NOTES.
4. IF INSPECTION OF WORK IS REQUIRED, THE CONTRACTOR SHALL NOTIFY THE INSPECTION ENTITY 24 HOURS IN ADVANCE OF THE WORK TO BE PERFORMED.
5. THE CONTRACTOR IS RESPONSIBLE FOR COORDINATING WITH UTILITY AGENCIES PRIOR TO WORK WITH UTILITIES. REFERENCE UTILITIES SECTION.
6. THE CONTRACTOR SHALL COORDINATE ON–SITE STORAGE WITH OWNER IN ADVANCE OF WORK. PERMITS MAY BE REQUIRED FOR STORAGE ON PUBLIC RIGHT OF WAY.
7. ALL NEW CONSTRUCTION SHALL MATCH EXISTING CONSTRUCTION IN FORM, TEXTURE, FINISH, AND IN MATERIALS EXCEPT AS NOTED IN THE CONSTRUCTION DOCUMENTS.
8. THE CONTRACTOR SHALL MAKE EVERY EFFORT TO PROTECT EXISTING WORK FROM DAMAGE DURING THE COURSE OF WORK FOR THIS PROJECT.
9. THE CONTRACTOR SHALL PROVIDE WORK WHICH IS LEVEL, PLUMB, AND WITHIN TOLERANCES SPECIFIED BY CODES AND STANDARDS INCLUDED IN THE STRUCTURAL NOTES.
10. THE CONTRACTOR SHALL INSTALL ALL EQUIPMENT AND MATERIALS ACCORDING TO MANUFACTURER'S SPECIFICATIONS UNLESS NOTED OTHERWISE OR WHERE LOCAL CODES OR ORDINANCES TAKE PRECEDENCE.
11. ANY SUBSTITUTIONS OF MATERIALS MUST BE APPROVED BY THE PROJECT TEAM IN WRITING.
12. THE CONTRACTOR SHALL SUPPLY ALL MATERIALS INCIDENTAL TO THE WORK DESCRIBED BY THE CONTRACT DOCUMENTS.
13. THE CONTRACTOR MUST RESTORE ALL PORTIONS OF THE PROJECT SITE TO IT'S PRE–WORK CONDITION. WHERE THE WORK PERFORMED DOES NOT ALLOW FOR PRE–WORK RESTORATION, WORK AREAS MUST BE REPAIRED OR REPLACED TO MATCH EXISTING FINISH AND SITE GRADING.
14. THE CONTRACTOR IS RESPONSIBLE FOR ALL DISPOSAL OF DEBRIS AND ITEMS WHICH ARE SPECIFIED TO BE REMOVED IN THE COURSE OF WORK.

CAST–IN PLACE CONCRETE:

1. ALL CONCRETE DESIGN DESCRIBED BY THIS SET OF DRAWINGS IS BASED ON ACI 318.
2. ALL STRUCTURAL CONCRETE SHALL HAVE A MINIMUM 28–DAY COMPRESSIVE STRENGTH OF 4,000 PSI. UNLESS SPECIFIED OTHERWISE.
3. EACH CONCRETE MIX DESIGN SHALL HAVE A CYLINDER TEST HISTORY OF 60 DAYS MINIMUM, TESTED IN ACCORDANCE WITH ASTM C39, TESTED BY AN ACI CERTIFIED STRENGTH TESTING TECHNICIAN, AND THE STRENGTH STATISTICALLY DETERMINED IN ACCORDANCE WITH ACI 318. EACH MIX DESIGN USED ON SITE SHALL BE SUBMITTED TO, AND RECEIVED BY THE PROJECT TEAM BEFORE THE CONCRETE IS PLACED ON SITE.
4. RAW MATERIALS, MANUFACTURE, AND DELIVERY TO THE FORMWORK SHALL BE IN ACCORDANCE WITH ASTM C94 AND ACI 318.
5. EMBEDDED ITEMS ARE TO BE SECURELY FASTENED SO THAT THEY DO NOT MOVE DURING PLACEMENT OF THE CONCRETE. REFERENCE THE REINFORCING STEEL SECTION.
6. TWO CYLINDERS SHALL BE TAKEN FOR EACH LOAD DELIVERED TO THE FORMWORK. SAMPLES ARE TO BE TAKEN FROM THE CONCRETE AS IT IS PLACED IN THE FORMWORK IN ACCORDANCE WITH ASTM C172. CYLINDERS ARE TESTED PER ASTM C39 AND TESTED BY AN ACI CERTIFIED CSTT. CONCRETE SAMPLES ARE TO BE TESTED FOR AIR CONTENT AND WATER CEMENT RATIO. ALL TEST RESULTS ARE SUBMITTED TO THE PROJECT TEAM WITHIN ONE MONTH OF PLACING THE CONCRETE ON SITE.
7. WHEN AMBIENT TEMPERATURES FALL BELOW 55 DEGREES FAHRENHEIT, THE CONTRACTOR SHALL FOLLOW GUIDELINES DESCRIBED IN ACI 306. WHEN AMBIENT TEMPERATURES RISE ABOVE 90 DEGREES FAHRENHEIT, THE CONTRACTOR SHALL FOLLOW GUIDELINES DESCRIBED IN ACI 305. THE CONCRETE SHALL BE PROTECTED FROM FREEZING OR FROM EXCESSIVE HEAT WITH TENTS OR BLANKETS TO PROVIDE FOR HEAT OR MOISTURE LOSS.
8. ALL CONCRETE SHALL BE PLACED AS CLOSE TO PRACTICAL TO THE FINAL DESTINATION IN THE FORM. CONCRETE SHALL NOT BE PLACE FROM A HEIGHT GREATER THAN 6 FEET FROM THE POINT OF DISCHARGE.
9. VIBRATION SHALL BE USED TO CONSOLIDATE CONVENTIONAL CONCRETE. EXTERNAL STINGER VIBRATORS SHALL BE INSERTED VERTICALLY INTO FORMS EVERY 36 INCHES MAXIMUM AND FOR EACH LIFT. STINGER VIBRATORS SHALL BE INSERTED TO A VERTICAL DEPTH OF 12 INCHES INTO PREVIOUS LIFTS TO ENSURE CONSOLIDATION. FOLLOW GUIDELINES USED IN ACI 309R.
10. REPAIRS FOR MINOR DEFECTS MAY BE ADMINISTERED BY AN EXPERIENCED CRAFTSMAN WITHOUT AN APPROVED PROCEDURE. A MINOR DEFECT INCLUDES BUG HOLES, HONEYCOMBING, CHIPS, AND SPALLS THAT DO NOT EXCEED ½ INCH OF DEPTH INTO THE FACE OF THE CONCRETE. MAJOR REPAIRS EXTENDING BEYOND ½ INCH OF DEPTH AND UP TO THE REINFORCING MAY BE REPAIRED WITH AN APPROVED REPAIR PROCEDURE. REPAIR PROCEDURES MAY BE SUBMITTED TO THE PROJECT TEAM FOR APPROVAL IN ADVANCE OF FIELD WORK. DAMAGE EXTENDING BEYOND STEEL REINFORCING REQUIRES A RETROFIT DESIGN OR IS REJECTED.
11. SEE ARCHITECTURAL NOTES FOR CONCRETE FINISH REQUIREMENTS

EXISTING STRUCTURES:

1. THE EXISTING FRAMING IS REPRODUCED FROM THE LATEST INFORMATION PROVIDED. SOME FRAMING AND MATERIALS ENCOUNTERED AT THE TIME OF CONSTRUCTION MAY VARY FROM THAT SHOWN IN THE PLANS. IF THE PLAN CONDITION VARIES FROM THE AS–BUILT CONDITION, THE CONTRACTOR SHOULD CONSULT THE PROJECT TEAM FOR A REVISED DETAIL OR DIRECTION TO PROCEED.

CONCRETE SLABS ON GRADE:

1. SLAB–ON–GRADE CONSTRUCTION SHALL BE SUPPORTED ON A 6 INCH LAYER OF CLEAN 3/4 INCH MINUS SUBGRADE COMPACTED TO A DENSITY OF NO LESS THAN 95% OF THE MODIFIED PROCTOR MAXIMUM DRY DENSITY (ASTM D–1557). SUBGRADE SHALL BE SUPPORTED ON UNDISTURBED NATIVE SOIL OR PROPERLY PLACED AND COMPACTED STRUCTURAL FILL.
2. INTERIOR SLABS–ON–GRADE SHALL BE CAST OVER A 4 MIL VAPOR BARRIER.
3. PROVIDE CONTROL JOINTS IN ALL SLABS ON GRADE. JOINTS ARE TO BE INSTALLED AT 14 TO 16 FEET ON CENTER EACH WAY MAXIMUM UNLESS SHOWN OTHERWISE ON THE DRAWINGS. ALL SAW CUT JOINTS IN CONCRETE SLABS ARE TO BE MADE WITH AN EARLY CUT SAW AS SOON AS POSSIBLE AFTER POURING BUT NO LATER THAN ONE HOUR AFTER FINISHING.
4. PROVIDE ISOLATION JOINTS AROUND ALL COLUMNS/SPREAD FOOTINGS. JOINTS SHALL BE FORMED BY INSERTING PREFORMED JOINT FILLER FOR THE FULL DEPTH OF THE SLAB.
5. PROTECT CONCRETE FROM DAMAGE OR REDUCED STRENGTH DUE TO COLD OR HOT WEATHER IN ACCORDANCE WITH ACI 305 AND 306. CONTRACTOR SHALL TAKE SPECIAL CURING PRECAUTIONS TO MINIMIZE SHRINKAGE CRACKING OF CONCRETE SLABS.
6. THE CONTRACTOR SHALL TAKE CARE THAT HEAVY EQUIPMENT AND AREAS USED FOR STAGING DO NOT AND DAMAGE SLABS ON GRADE. DAMAGED SLABS ON SHALL BE REPAIRED OR REPLACED AT NO ADDITIONAL EXPENSE TO THE OWNER.
7. CONCRETE SHALL HAVE A MINIMUM 28–DAY COMPRESSIVE STRENGTH OF 2,500 PSI. UNLESS SPECIFIED OTHERWISE.

CONCRETE OR MASONRY ANCHORAGE:

1. EXPANSION BOLTS INTO CONCRETE SHALL BE "KWIK BOLT TZ" AS MANUFACTURED BY THE HILTI CORP., INSTALLED IN STRICT ACCORDANCE WITH ICC–ES REPORT ESR–1917. SPECIAL INSPECTION IS REQUIRED. EXPANSION ANCHORS EXPOSED TO WEATHER SHALL BE STAINLESS STEEL.

REINFORCING STEEL:

1. ALL DETAILING, FABRICATION, AND PLACEMENT OF REINFORCING STEEL SHALL BE IN ACCORDANCE WITH THE ACI MANUAL OF CONCRETE PRACTICE.
2. REINFORCING BARS SHALL BE DEFORMED AND CONFORM TO ASTM A615 OR A706, GRADE 60. REINFORCING TIE WIRE MAY BE GRADE 40.
3. REINFORCING STEEL SPLICES SHALL BE 40 BAR DIAMETERS OR TWO TRANSVERSE WIRE SPACINGS FOR WIRE MATS.
4. MINIMUM CONCRETE PROTECTION FOR REINFORCEMENT SHALL BE IN ACCORDANCE WITH ACI 318.
5. NO.5 OR LARGER REINFORCING BARS SHALL NOT BE RE–BENT WITHOUT APPROVAL BY THE STRUCTURAL ENGINEER.
6. WELDING OF REBAR IS NOT ALLOWED WITHIN THE MIDDLE THIRD OF THE BAR LENGTH. WELDING OF REBAR IS CONDUCTED IN ACCORDANCE WITH AWS D1.4. USE ONLY ASTM A706 REINFORCING.
7. WIRE REINFORCING CONFORMS TO ASTM A82 OR A185.
8. CONCRETE COVER FOR REINFORCING STEEL CONFORMS TO ACI 318.

ELECTRICAL:

1. ELECTRICAL CONTRACTOR SHALL SUPPLY AND INSTALL ANY/ALL ELECTRICAL WORK INDICATED. ANY/ALL CONSTRUCTION SHALL BE IN ACCORDANCE W/DRAWINGS AND ANY/ALL APPLICABLE SPECIFICATIONS. IF ANY PROBLEMS ARE ENCOUNTERED BY COMPLYING WITH THESE REQUIREMENTS, CONTRACTOR SHALL NOTIFY 'CONSTRUCTION MANAGER' AS SOON AS POSSIBLE. AFTER THE DISCOVERY OF THE PROBLEMS. AND SHALL NOT PROCEED WITH THAT PORTION OF WORK, UNTIL THE 'CONSTRUCTION MANAGER' HAS DIRECTED THE CORRECTIVE ACTIONS TO BE TAKEN.
2. ELECTRICAL CONTRACTOR SHALL VISIT THE JOB SITE AND FAMILIARIZE HIMSELF WITH ANY/ALL CONDITIONS AFFECTING ELECTRICAL AND COMMUNICATION INSTALLATION AND MAKE PROVISIONS AS TO THE COST THEREOF. ALL (E) CONDITIONS OF ELECTRICAL EQUIP., LIGHT FIXTURES. ETC,. THAT ARE PART OF THE FINAL SYSTEM. SHALL BE VERIFIED BY THE CONTRACTOR, PRIOR TO THE SUBMITTING OF HIS BID. FAILURE TO COMPLY WITH THIS PARAGRAPH WILL IN NO WAY RELIEVE CONTRACTOR OF PERFORMING ALL WORK NECESSARY FOR A COMPLETE AND WORKING SYSTEM.
3. ALL WORK SHALL BE PERFORMED IN ACCORDANCE WITH THE LATEST EDITION OF THE NEC AND ALL CODES AND LOCAL ORDINANCES OF THE LOCAL POWER & TELEPHONE COMPANIES HAVING JURISDICTION AND SHALL INCLUDE BUT NOT BE LIMITED TO:
   A. UL – UNDERWRITERS LABORATORIES
   B. NEC – NATIONAL ELECTRICAL CODE
   C. NEMA – NATIONAL ELECTRICAL MANUFACTURERS ASSOC.
   D. OSHA – OCCUPATIONAL SAFETY AND HEAL TH ACT
   E. SBC – STANDARD BUILDING CODE
4. (E) SERVICES: CONTRACTOR SHALL NOT INTERRUPT (E) SERVICES WITHOUT WRITTEN PERMISSION OF THE OWNER. CONTRACTOR SHALL PAY FOR ANY/ALL PERMITS, FEES, INSPECTIONS AND TESTING. CONTRACTOR IS TO OBTAIN PERMITS AND APPROVED SUBMITTALS PRIOR TO THE WORK BEGINNING OR ORDERING EQUIPMENT.
5. CONTRACTOR SHALL CONFIRM WITH LOCAL UTILITY COMPANY ANY/ALL REQUIREMENTS SUCH AS THE: LUG SIZE RESTRICTIONS, CONDUIT ENTRY, SIZE OF TRANSFORMERS, SCHEDULED DOWNTIME FOR THE OWNERS' CONFIRMATION, ETC ... ANY/ALL CONFLICTS SHALL BE BROUGHT TO THE ATTENTION OF THE CONSTRUCTION MANAGER. PRIOR TO BEGINNING ANY WORK.
6. MINIMUM WIRE SIZE SHALL BE #12 AWG. NOT INCLUDING CONTROL WIRING. UNLESS NOTED OTHERWISE. ALL CONDUCTORS SHALL BE COPPER WITH THWN INSULATION.
7. OUTLET BOXES SHALL BE PRESSED STEEL IN DRY LOCATIONS. CAST ALLOY WITH THREADED HUBS IN WET/DAMP LOCATIONS AND SPECIAL ENCLOSURES FOR OTHER CLASSIFIED AREAS.
8. IT IS NOT THE INTENT OF THESE PLANS TO SHOW EVERY MINOR DETAIL OF THE CONSTRUCTION. CONTRACTOR IS EXPECTED TO FURNISH AND INSTALL ALL ITEMS FOR A COMPLETE ELECTRICAL SYSTEM AND PROVIDE ALL REQUIREMENTS FOR THE EQUIPMENT TO BE PLACED IN PROPER WORKING ORDER.
9. ELECTRICAL SYSTEM SHALL BE AS COMPLETELY AND EFFECTIVELY GROUNDED, AS REQUIRED BY SPECIFICATIONS, SET FORTH BY AT&T.
10. ALL WORK SHALL BE PERFORMED BY A LICENSED ELECTRICAL CONTRACTOR IN A FIRST CLASS. WORKMANLIKE MANNER. THE COMPLETED SYSTEM SHALL BE FULLY OPERATIVE AND SUBJECT TO REGULATORY INSPECTION AND APPROVAL BY CONSTRUCTION MANAGER.
11. ALL WORK SHALL BE COORDINATED WITH OTHER TRADES TO AVOID INTERFERENCE WITH THE PROGRESS OF CONSTRUCTION.
12. PROVIDE AND INSTALL CONDUIT, CONDUCTORS, PULL WIRES, BOXES, COVER PLATES AND DEVICES FOR ALL OUTLETS AS INDICATED.
13. DITCHING AND BACK FILL: CONTRACTOR SHALL PROVIDE FOR ALL UNDERGROUND INSTALLED CONDUIT AND/OR CABLES INCLUDING EXCAVATION AND BACKFILLING AND COMPACTION. REFER TO NOTES AND REQUIREMENTS 'EXCAVATION, AND BACKFILLING.
14. THE ELECTRICAL CONTRACTOR SHALL LABEL ALL PANELS WITH ONLY TYPEWRITTEN DIRECTORIES. ALL ELECTRICAL WIRING SHALL BE THE RESPONSIBILITY OF THE ELECTRICAL CONTRACTOR.
15. DISCONNECT SWITCHES SHALL BE H.P. RATED HEAVY–DUTY, QUICK–MAKE AND QUICK–BREAK ENCLOSURES, AS REQUIRED BY EXPOSURE TYPE.
16. ALL CONNECTIONS SHALL BE MADE WITH A PROTECTIVE COATING OF AN ANTI–OXIDE COMPOUND SUCH AS "NO–OXIDE A" BY DEARBORNE CHEMICAL CO. COAT ALL WIRE SURFACES BEFORE CONNECTING. EXPOSED COPPER SURFACES, INCLUDING GROUND BARS. SHALL BE TREATED – NO SUBSTITUTIONS.
17. RACEWAYS: CONDUIT SHALL BE SCHEDULE 40 PVC MEETING OR EXCEEDING NEMA TC2 – 1990. CONTRACTOR SHALL PLUG AND CAP EACH END OF SPARE AND EMPTY CONDUITS AND PROVIDE TWO SEPARATE PULL STRINGS – 200 LBS TEST POLYETHYLENE CORD. ALL CONDUIT BENDS SHALL BE A MINIMUM OF 2 FT. RADIUS. RGS CONDUITS WHEN SPECIFIED, SHALL MEET UL–6 FOR GALVANIZED STEEL. ALL FITTINGS SHALL BE SUITABLE FOR USE WITH THREADED RIGID CONDUIT. COAT ALL THREADS WITH 'BRITE ZINC' OR 'GOLD GALV'.
18. CONDUCTORS: CONTRACTOR SHALL USE 98% CONDUCTIVITY COPPER WITH TYPE THWN INSULATION, 800 VOLT, COLOR CODED. USE SOLID CONDUCTORS FOR WIRE UP TO AND INCLUDING NO. 8 AWG. USE STRANDED CONDUCTORS FOR WIRE ABOVE NO. 8 AWG.
19. CONNECTORS FOR POWER CONDUCTORS: CONTRACTOR SHALL USE PRESSURE TYPE INSULATED TWIST–ON CONNECTORS FOR NO. 10 AWG AND SMALLER. USE SOLDERLESS MECHANICAL TERMINAL LUGS FOR NO. B AWG AND LARGER.
20. SERVICE: 240/120V, SINGLE PHASE, 3 WIRE CONNECTION AVAILABLE FROM UTILITY COMPANY. OWNER OR OWNERS AGENT WILL APPLY FOR POWER.
21. ELECTRICAL AND TELCO RACEWAYS TO BE BURIED A MINIMUM OF 2' DEPTH.
22. CONTRACTOR SHALL PLACE TWO LENGTHS OF WARNING TAPE AT A DEPTH OF 12" BELOW GROUND AND DIRECTLY ABOVE ELECTRICAL AND TELCO SERVICE CONDUITS. CAUTIONS TAPE TO READ "CAUTION BURIED ELECTRIC" OR "BURIED TELECOMM".
23. ALL BOLTS SHALL BE STAINLESS STEEL

GROUNDING:

1. COMPRESSION CONNECTIONS (2). 2 AWG BARE TINNED SOLID COPPER CONDUCTORS TO GROUNDING BAR. ROUTE CONDUCTORS TO BURIED GROUNDING RING AND PROVIDE PARALLEL EXOTHERMIC WELD.
2. EC SHALL USE PERMANENT MARKER TO DRAW THE LINES BETWEEN EACH SECTION AND LABEL EACH SECTION ("P", "A", "N", "I") WITH 1" HIGH LETTERS.
3. ALL HARDWARE 18–8 STAINLESS STEEL, INCLUDING LOCK WASHERS. COAT ALL SURFACES WITH AN ANTI–OXIDANT COMPOUND BEFORE MATING. ALL HARDWARE SHALL BE STAINLESS STEEL 3/8 INCH DIAMETER OR LARGER.
4. FOR GROUND BOND TO STEEL ONLY: INSERT A CADMIUM FLAT WASHER BETWEEN LUG AND STEEL, COAT ALL SURFACES WITH AN ANTI–OXIDANT COMPOUND BEFORE MATING.
5. NUT & WASHER SHALL BE PLACED ON THE FRONT SIDE OF THE GROUNDING BAR AND BOLTED ON THE BACK SIDE.
6. NUMBER OF GROUNDING BARS MAY VARY DEPENDING ON THE TYPE OF TOWER, ANTENNA LOCATION. AND CONNECTION ORIENTATION. PROVIDE AS REQUIRED.
7. WHEN THE SCOPE OF WORK REQUIRES THE ADDITION OF A GROUNDING BAR TO AN (E) TOWER,THE SUBCONTRACTOR SHALL OBTAIN APPROVAL FROM THE TOWER OWNER PRIOR TO MOUNTING THE GROUNDING BAR TO THE TOWER.
8. ALL ELECTRICAL AND GROUNDING AT THE CELL SITE SHALL COMPLY WITH THE NATIONAL ELECTRICAL CODE (NEC). NATIONAL FIRE PROTECTION ASSOCIATION (NFPA) 780 (LATEST EDITION), AND MANUFACTURER.

ABBREVIATIONS:

A/C	AIR CONDITIONING
AGL	ABOVE GROUND LEVEL
AMSL	ABOVE MEAN SEA LEVEL
APPROX	APPROXIMATELY
AWG	AMERICAN WIRE GAGE
BCW	BARE COPPER WIRE
BLDG	BUILDING
BLK	BLOCKING
CLR	CLEAR
COAX	COAXIAL CABLE
CONC	CONCRETE
CONST	CONSTRUCTION
CONT	CONTINUOUS
DIA	DIAMETER
DWG	DRAWING
EA	EACH
ELEV	ELEVATION
ELEC	ELECTRICAL
EQ	EQUAL
EQUIP	EQUIPMENT
EXT	EXTERIOR
FIN	FINISH
FLUOR	FLUORESCENT
FLR	FLOOR
FT	FOOT
FRP	FIBER–REINFORCED POLYMER
GA	GAUGE
GALV	GALVANIZED
GC	GENERAL CONTRACTOR
GPS	GLOBAL POSITIONING SYSTEM
GRND	GROUND
HORZ	HORIZONTAL
HR	HOUR
HT	HEIGHT
HVAC	HEATING VENTILATION AIR CONDITIONING
ID	INSIDE DIAMETER
IN	INCH
INFO	INFORMATION
INSUL	INSULATION
INT	INTERIOR
IBC	INTERNATIONAL BUILDING CODE
LBS	POUNDS
LMU	LOCATION MEASUREMENT UNIT
LTE	LONG TERM EVOLUTION
MAX	MAXIMUM
MECH	MECHANICAL
MTL	METAL
MFR	MANUFACTURE
MGR	MANAGER
MIN	MINIMUM
MISC	MISCELLANEOUS
NA	NOT APPLICABLE
NIC	NOT IN CONTRACT
NTS	NOT TO SCALE
OC	ON CENTER
OD	OUTSIDE DIAMETER
PLYWD	PLYWOOD
PROJ	PROJECT
PROP	PROPERTY
PT	PRESSURE TREATED
REQ	REQUIRED
RF	RADIO FREQUENCY
RM	ROOM
RO	ROUGH OPENING
RRH	REMOTE RADIO HEAD
RRU	REMOTE RADIO UNIT
SHT	SHEET
SIM	SIMILAR
SPEC	SPECIFICATION
SF	SQUARE FOOT
SS	STAINLESS STEEL
STL	STEEL
STRUCT	STRUCTURAL
STD	STANDARD
SUSP	SUSPENDED
THRU	THROUGH
TMA	TOWER MOUNTED AMPLIFIER
TNNG	TINNED
TYP	TYPICAL
UNO	UNLESS NOTED OTHERWISE
VERT	VERTICAL
VIF	VERIFY IN FIELD
W/	WITH
W/O	WITHOUT
WP	WATER PROOF

at&t Mobility

MasTec Network Solutions

125 KLUG CIRCLE
CORONA, CALIFORNIA 92880

FA CODE:	FA # 10070274
DRAWN BY:	J.C
JOB #:	30097

REV	DATE	DESCRIPTION
1	02/05/2024	100% CD'S - S&S
0	06/27/23	100% CD'S FOR REVIEW
E	04/24/23	95% CD'S UPDATE-RAD CHANGE
D	01/30/23	95% CD'S UPDATE
C	04/28/22	95% CD'S UPDATE
B	03/01/22	90% CD'S UPDATE
A	01/27/22	90% CD'S FOR REVIEW

REGISTERED PROFESSIONAL ENGINEER
JOSEPH RUSSELL KING
C93286
CIVIL
STATE OF CALIFORNIA

Digitally signed by Joseph Russell King
Date: 2024.02.05 17:00:38 -05'00'

IT IS A VIOLATION OF LAW FOR ANY PERSON, UNLESS THEY ARE ACTING UNDER THE DIRECTION OF A LICENSED PROFESSIONAL ENGINEER, TO ALTER THIS DOCUMENT.

CCL04753
BLACKHAWK
CORNER OF BLACKHAWK AND EAGLES NEST
DANVILLE, CALIFORNIA 94506
FA NUMBER
10070274

SHEET TITLE
GENERAL NOTES

SHEET NUMBER
GN-1

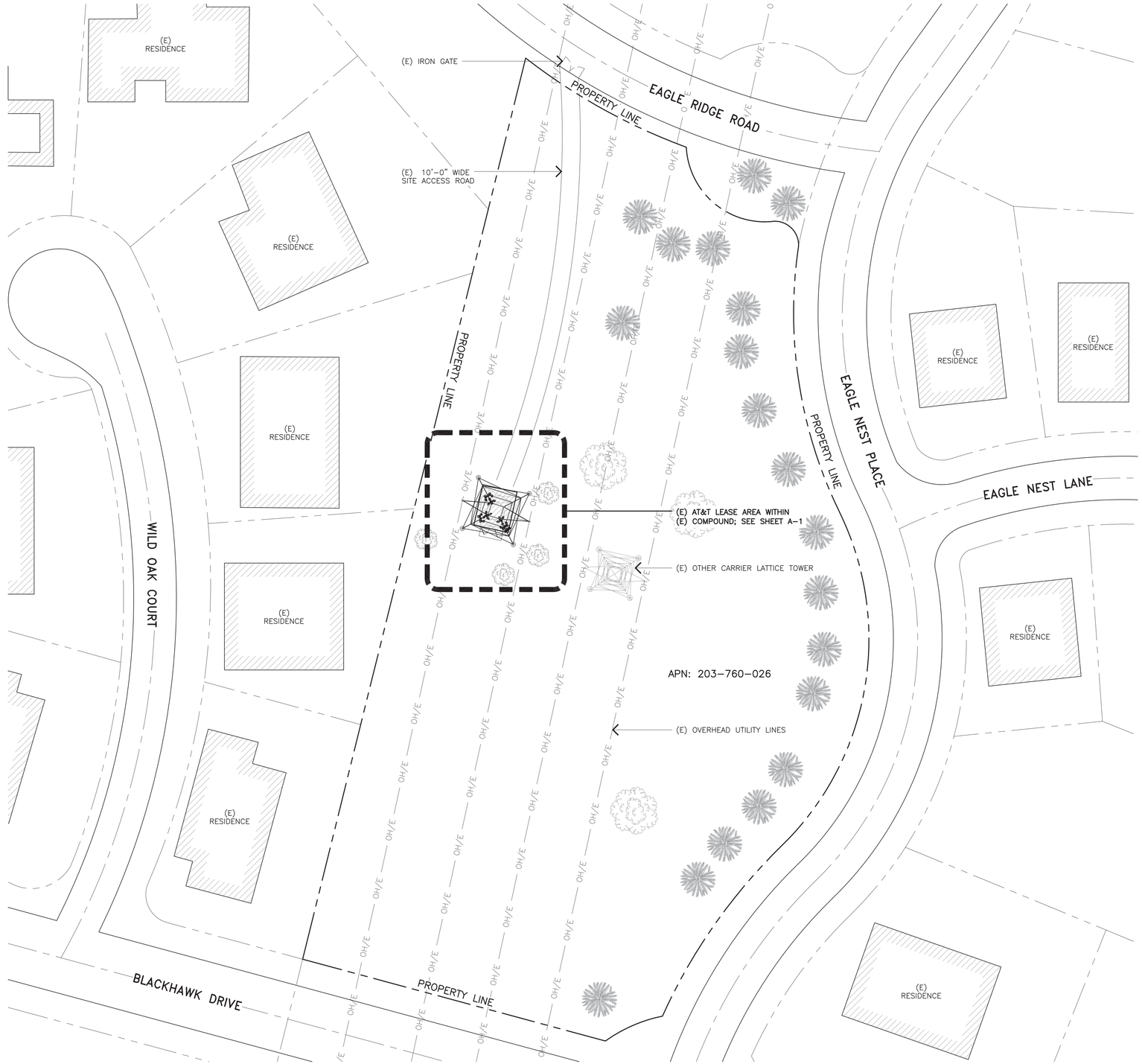

NOTE
THESE DRAWINGS WERE PRODUCED WITHOUT THE BENEFIT OF A CURRENT LAND SURVEY. ALL PROPERTY LINES, EASEMENTS, SETBACKS, AND EXISTING CONDITIONS ARE APPROXIMATE AND SHALL BE VERIFIED PRIOR TO START OF CONSTRUCTION.

OVERALL SITE PLAN

11X17 SCALE: 1" = 60'
24X36 SCALE: 1" = 30'

0' 15' 30' 60'

1

at&t Mobility

MasTec Network Solutions

125 KLUG CIRCLE
CORONA, CALIFORNIA 92880

FA CODE:	FA # 10070274
DRAWN BY:	J.C
JOB #:	30097

REV	DATE	DESCRIPTION
1	02/05/2024	100% CD'S - S&S
0	06/27/23	100% CD'S FOR REVIEW
E	04/24/23	95% CD'S UPDATE-RAD CHANGE
D	01/30/23	95% CD'S UPDATE
C	04/28/22	95% CD'S UPDATE
B	03/01/22	90% CD'S UPDATE
A	01/27/22	90% CD'S FOR REVIEW

REGISTERED PROFESSIONAL ENGINEER
JOSEPH RUSSELL KING
C93286
CIVIL
STATE OF CALIFORNIA

Digitally signed by Joseph Russell King
Date: 2024.02.05 17:30:20 -05'00'

IT IS A VIOLATION OF LAW FOR ANY PERSON, UNLESS THEY ARE ACTING UNDER THE DIRECTION OF A LICENSED PROFESSIONAL ENGINEER, TO ALTER THIS DOCUMENT.

CCL04753
BLACKHAWK
CORNER OF BLACKHAWK AND EAGLES NEST
DANVILLE, CALIFORNIA 94506
FA NUMBER
10070274

SHEET TITLE
OVERALL SITE PLAN

SHEET NUMBER
A-0

ENLARGED SITE PLAN GENERAL NOTES

A. OTHER CARRIER ANTENNAS NOT SHOWN FOR CLARITY.

B. GROUND ALL (N) EQUIPMENT AND COAX PER SHEET G–1.

C. CONTRACTOR TO PROVIDE ALL LABOR TO INSTALL COAX, RETS AND ANTENNAS.

D. CONTRACTOR TO PROVIDE ALL COAX, CONNECTORS, ANCILLARY EQUIPMENT (INCLUDING WEATHER STRIPPING, GROUND KITS, ETC.).

E. CONTRACTOR TO COLOR CODE ALL COAX. COLORED BANDS OF TAPE ON COAX IDENTIFY SECTOR, FREQUENCY, TECHNOLOGY, AND TRANSMIT GROUP AS FOLLOWS ON ALL COAX MODIFIED OR INSTALLED ONLY.

F. WHEN ANTENNA LINES ARE DIPLEXED, THE COLOR CODE OF THE HIGHEST FREQUENCY PREVAILS (I.E. UMTS DIPLEXED WITH TDMA SHOULD HAVE COLOR 4 BANDS).

G. ALL ANTENNAS AND ANTENNA CABLE SHALL BE FURNISHED BY CONTRACTOR AND INSTALLED BY ANTENNA INSTALLATION CONTRACTOR.

H. PRIOR TO PLACEMENT OF ANTENNA POLE MOUNTS, THE CONTRACTOR SHALL VERIFY THAT THE AZIMUTH AND DIMENSIONS SHOWN ON THE PLANS MATCH ACTUAL FIELD CONDITIONS. ALLOWABLE TOLERANCE: HORIZONTAL ALIGNMENT = ±5°; VERTICAL ALIGNMENT = ±1°.

I. ANTENNA INSTALLATION CONTRACTOR SHALL PROVIDE ALL CONDUIT, CABLE TRAY, GROUNDS, ETC. FOR COMPLETE INSTALLATION OF ANTENNAS AND CABLES SHOWN AND INTENDED AS REQUIRED FOR A COMPLETE OPERATING SYSTEM IN ACCORDANCE WITH CONTRACTOR STANDARDS.

J. IN NO CASE SHALL THERE BE ANY MORE THAN TWO (2) 90° TURNS (OR EQUIVALENT) IN ANY CONTINUOUS LENGTH OF CONDUIT BETWEEN PULL BOXES OR SIMILAR FEATURES.

K. ANTENNA CONDUIT SHALL ONLY INCLUDE FACTORY–MADE LARGE RADIUS SWEEPS AT ALL CHANGES IN DIRECTION. SWEEP RADIUS SHALL BE 18" MINIMUM ABOVE GROUND AND 36" MINIMUM BELOW GROUND.

L. CONDUIT SHALL BE 3"ø MINIMUM. ALL UNDERGROUND CONDUIT SHALL BE SCHEDULE 40 PVC. ALL EXPOSED CONDUIT ABOVE GRADE LEVEL SHALL BE IMC OR RIGID GALVANIZED. ALL EXPOSED CONDUIT PROTECTED IN A BUILDING OR ON A ROOF SHALL BE EMT OR UV STABILIZED PAINTED SCHEDULE 80 PVC.

M. IN HIGH TRAFFIC AREAS OR WHERE SUSCEPTIBLE TO DAMAGE CONTRACTOR SHALL PROVIDE FORMED 14 GA. GALVANIZED SHEET METAL COVER OVER COAXIAL CABLE ROUTES. WHERE CABLE IS RUN ON THE WALL, ATTACH UNISTRUT TO WALL AND COVER WITH 14 GA. GALVANIZED FORMED SHEET METAL COVER OR MATERIAL AS DIRECTED BY CONTRACTOR CONSTRUCTION MANAGER.

N. VERIFY ROUTE AND LENGTH OF CABLE PRIOR TO CUTTING. ADJUST INDICATED ROUTE AS REQUIRED TO CLEAR (E) EQUIPMENT AT FACILITIES.

O. MAXIMUM LENGTH OF 7/8" COAX CABLE SHALL BE 140'–0". MAXIMUM LENGTH OF 1–1/4" COAX CABLE SHALL BE 190'–0". MAXIMUM LENGTH OF 1–5/8" COAX CABLE SHALL BE 235'–0".

P. VERIFY MODEL NUMBERS OF ANTENNAS WITH CONTRACTOR SERVICES.

Q. THE CONTRACTOR SHALL PROVIDE TESTING OF ANTENNAS AND SHALL PROVIDE DOCUMENTATION TO THE CONTRACTOR PROJECT MANAGER.

R. GENERAL CONTRACTOR TO VERIFY ALL TORQUE TOLERANCES PER THE MANUFACTURERS SPECIFICATIONS AND RECOMMENDATIONS.

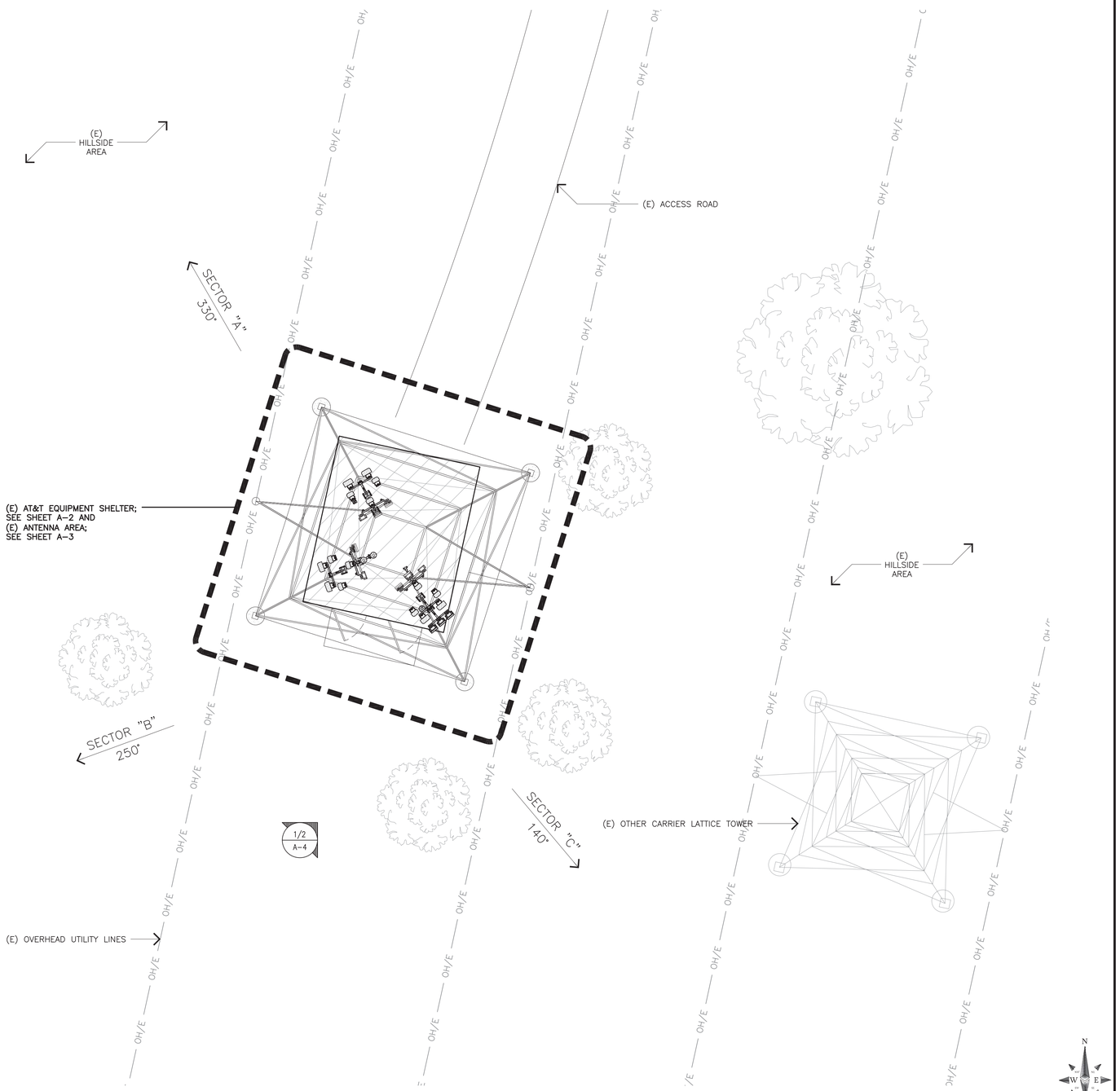

ENLARGED SITE PLAN

11X17 SCALE: 1/16" = 1'–0"
24X36 SCALE: 1/8" = 1'–0"

0' 4' 8' 16'

1

at&t Mobility

MasTec Network Solutions

125 KLUG CIRCLE
CORONA, CALIFORNIA 92880

FA CODE:	FA # 10070274
DRAWN BY:	J.C
JOB #:	30097

REV	DATE	DESCRIPTION
1	02/05/2024	100% CD'S - S&S
0	06/27/23	100% CD'S FOR REVIEW
E	04/24/23	95% CD'S UPDATE-RAD CHANGE
D	01/30/23	95% CD'S UPDATE
C	04/28/22	95% CD'S UPDATE
B	03/01/22	90% CD'S UPDATE
A	01/27/22	90% CD'S FOR REVIEW

REGISTERED PROFESSIONAL ENGINEER
JOSEPH RUSSELL KING
C93286
CIVIL
STATE OF CALIFORNIA

Digitally signed by Joseph Russell King
Date: 2024.02.05 17:30:54 -05'00'

IT IS A VIOLATION OF LAW FOR ANY PERSON, UNLESS THEY ARE ACTING UNDER THE DIRECTION OF A LICENSED PROFESSIONAL ENGINEER, TO ALTER THIS DOCUMENT.

CCL04753
BLACKHAWK
CORNER OF BLACKHAWK AND EAGLES NEST
DANVILLE, CALIFORNIA 94506
FA NUMBER
10070274

SHEET TITLE
ENLARGED SITE PLAN

SHEET NUMBER
A-1

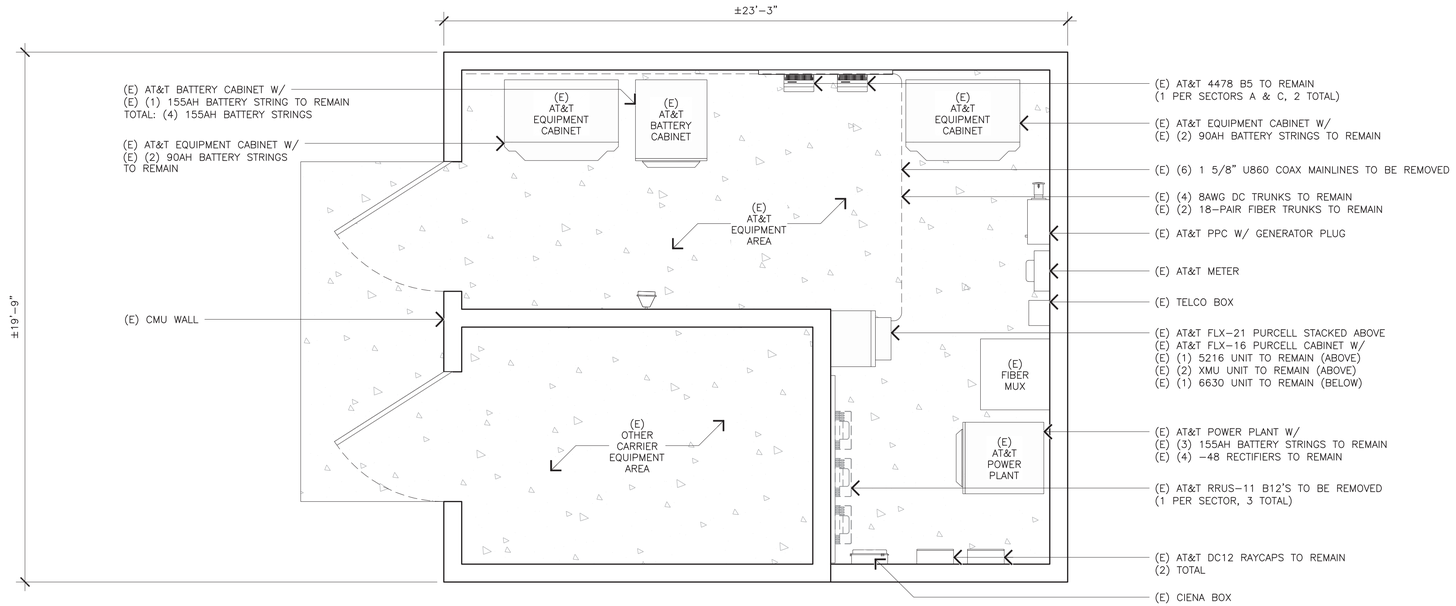

EXISTING EQUIPMENT LAYOUT

11X17 SCALE: 3/16" = 1'-0"
24X36 SCALE: 3/8" = 1'-0"
0' 1' 3' 5'

1

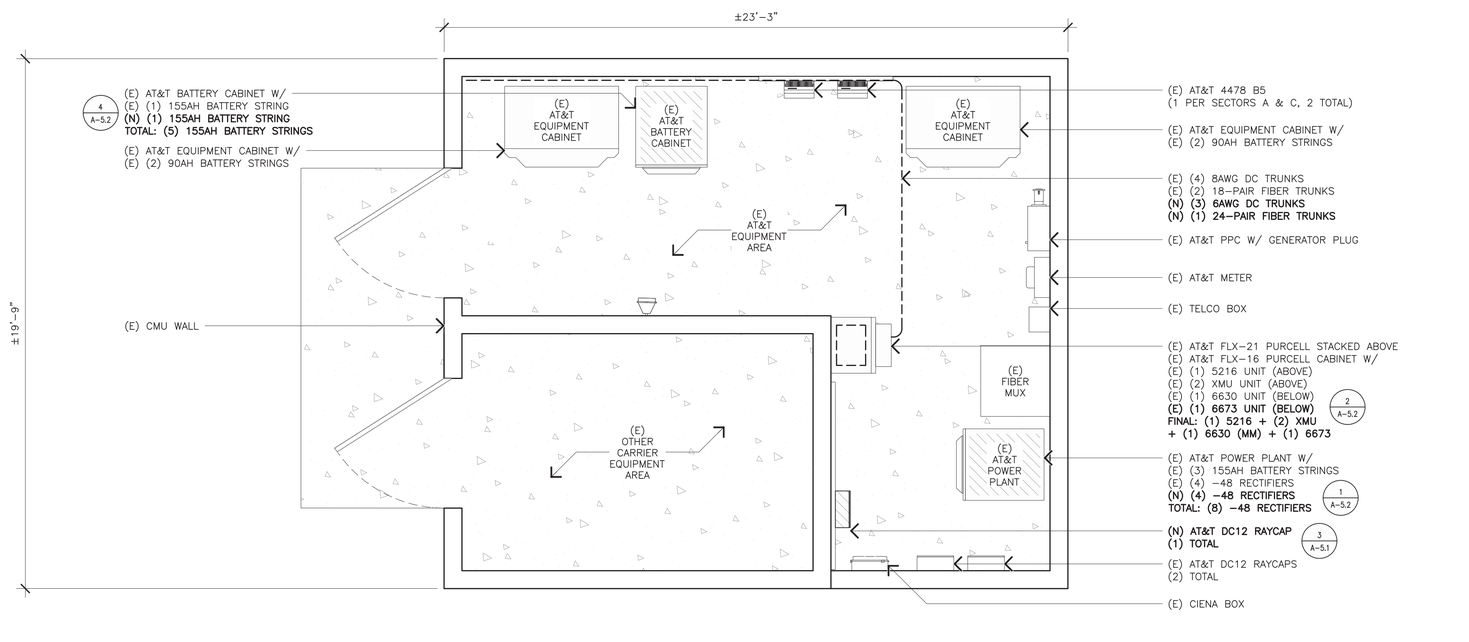

PROPOSED EQUIPMENT LAYOUT

11X17 SCALE: 3/16" = 1'-0"
24X36 SCALE: 3/8" = 1'-0"
0' 1' 3' 5'

2

at&t Mobility

MasTec Network Solutions

125 KLUG CIRCLE
CORONA, CALIFORNIA 92880

FA CODE:	FA # 10070274
DRAWN BY:	J.C
JOB #:	30097

REV	DATE	DESCRIPTION
1	02/05/2024	100% CD'S - S&S
0	06/27/23	100% CD'S FOR REVIEW
E	04/24/23	95% CD'S UPDATE-RAD CHANGE
D	01/30/23	95% CD'S UPDATE
C	04/28/22	95% CD'S UPDATE
B	03/01/22	90% CD'S UPDATE
A	01/27/22	90% CD'S FOR REVIEW

REGISTERED PROFESSIONAL ENGINEER
JOSEPH RUSSELL KING
C93286
CIVIL
STATE OF CALIFORNIA

Digitally signed by Joseph Russell King
Date: 2024.02.05 17:31:15 -08'00'

IT IS A VIOLATION OF LAW FOR ANY PERSON, UNLESS THEY ARE ACTING UNDER THE DIRECTION OF A LICENSED PROFESSIONAL ENGINEER, TO ALTER THIS DOCUMENT.

CCL04753
BLACKHAWK
CORNER OF BLACKHAWK AND EAGLES NEST
DANVILLE, CALIFORNIA 94506
FA NUMBER
10070274

SHEET TITLE
EQUIPMENT LAYOUT

SHEET NUMBER
A-2

EXISTING ANTENNA SCHEDULE										
SECTOR	POSITION	BAND TECH.	ANTENNA MODEL	ANTENNA AZIMUTH	RAD–CENTER	QTY./RRU MODEL	QTY./DIPLEXER MODEL	QTY./RAYCAP MODEL	CABLING	LENGTH
ALPHA	A1	LTE 700 LTE 850 5G 850 LTE 1900	CCI OPA–65R–BU6BA–K	330°	124'–0"	(1) RRUS–11 B12 (DN) (1) 4478 B5 (DN) (1) 4415 B25	–	(1) DC6–48–60–18–8C–EV	(4) 8AWG DC TRUNKS (2) 18–PAIR FIBER TRUNKS	±80'
	A2	LTE 700 UMTS 850 LTE AWS	CCI OPA–65R–BU6BA–K	330°	124'–0"	(1) 4478 B14 (1) 4426 B66	–	–		
BETA	B1	LTE 700 LTE 850 5G 850 LTE 1900	CCI OPA–65R–BU6BA–K	250°	124'–0"	(1) RRUS–11 B12 (DN) (1) 4415 B25	–	(1) DC6–48–60–18–8C–EV		
	B2	LTE 700 UMTS 850 LTE AWS	CCI OPA–65R–BU6BA–K	250°	124'–0"	(1) 4426 B66	–	–		
GAMMA	C1	LTE 700 LTE 850 5G 850 LTE 1900	CCI OPA–65R–BU6BA–K	140°	124'–0"	(1) RRUS–11 B12 (DN) (1) 4478 B5 (DN) (1) 4415 B25	–	–		
	C2	LTE 700 UMTS 850 LTE AWS	CCI OPA–65R–BU6BA–K	140°	124'–0"	(1) 4478 B14 (1) 4426 B66	–	–		
TOTALS			6 TOTAL			8 TOTAL (UP) 5 TOTAL (DN)	0 TOTAL	2 TOTAL		
LEGEND /NOTES	(UP) UP ON TOWER (DN) DOWN NEAR EQUIPMENT AREA *VERIFY LATEST VERSION OF THE RFDS PRIOR TO CONSTRUCTION. *DO NOT USE CABLE LENGTHS FOR CUT LENGTHS – ESTIMATES ONLY – VERIFY IN FIELD PRIOR TO ORDERING MATERIAL.									

124'–0" RAD–CENTER

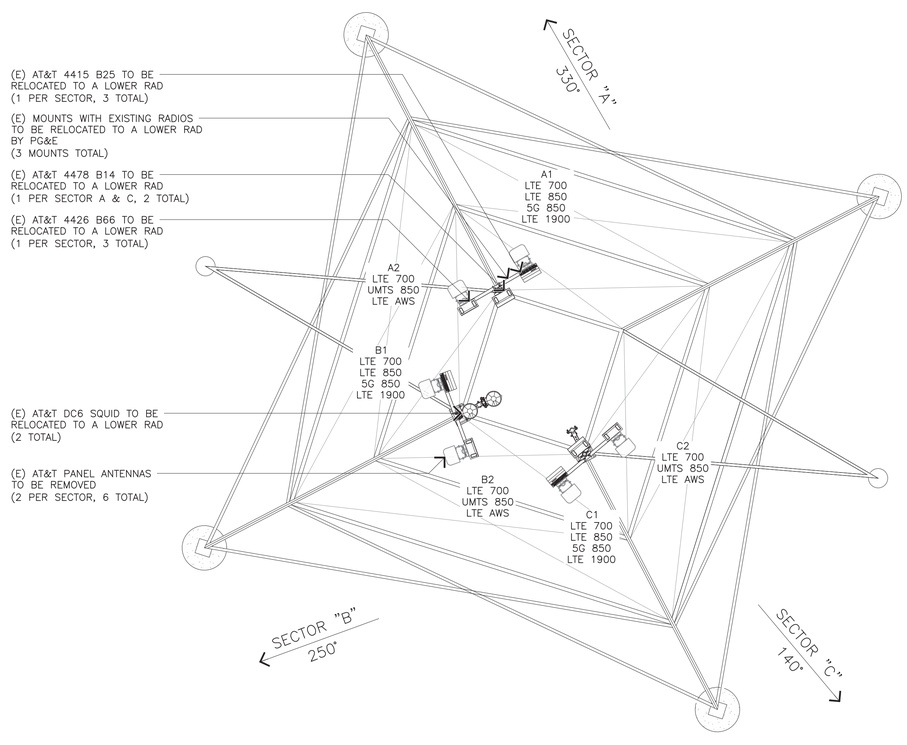

EXISTING ANTENNA LAYOUT

11X17 SCALE: 1/8" = 1'–0"
24X36 SCALE: 1/4" = 1'–0"

0' 2' 4' 8'

1

at&t Mobility

MasTec Network Solutions

125 KLUG CIRCLE
CORONA, CALIFORNIA 92880

FA CODE:	FA # 10070274
DRAWN BY:	J.C
JOB #:	30097

REV	DATE	DESCRIPTION
1	02/05/2024	100% CD'S - S&S
0	06/27/23	100% CD'S FOR REVIEW
E	04/24/23	95% CD'S UPDATE-RAD CHANGE
D	01/30/23	95% CD'S UPDATE
C	04/28/22	95% CD'S UPDATE
B	03/01/22	90% CD'S UPDATE
A	01/27/22	90% CD'S FOR REVIEW

REGISTERED PROFESSIONAL ENGINEER
JOSEPH RUSSELL KING
C93286
CIVIL
STATE OF CALIFORNIA

Digitally signed by Joseph Russell King
Date: 2024.02.05 17:31:39 -05'00'

IT IS A VIOLATION OF LAW FOR ANY PERSON, UNLESS THEY ARE ACTING UNDER THE DIRECTION OF A LICENSED PROFESSIONAL ENGINEER, TO ALTER THIS DOCUMENT.

CCL04753
BLACKHAWK
CORNER OF BLACKHAWK AND EAGLES NEST
DANVILLE, CALIFORNIA 94506
FA NUMBER
10070274

SHEET TITLE
EXISTING ANTENNA LAYOUT

SHEET NUMBER
A-3

FINAL ANTENNA SCHEDULE

SECTOR	POSITION	BAND TECH.	ANTENNA MODEL	ANTENNA AZIMUTH	RAD-CENTER	QTY./RRU MODEL	QTY./DIPLEXER MODEL	QTY./RAYCAP MODEL	CABLING	LENGTH
ALPHA	A1	LTE 700 LTE 1900	COMMSCOPE SBNHH-1D65A	330°	128'-6"	(1) 4415 B25 **(1) 4478 B12A**	–		(4) 8AWG DC TRUNKS (2) 18-PAIR FIBER TRUNKS **(3) 6AWG DC TRUNKS** **(1) 24-PAIR FIBER TRUNKS**	±80'
	A2	LTE 700 LTE AWS	COMMSCOPE SBNHH-1D65A	330°	121'-10"	(1) 4426 B66	–	(1) DC6-48-60-18-8C-EV		
	A3	LTE 700 5G 850	COMMSCOPE SBNHH-1D65A	330°	121'-10"	(1) 4478 B14 (1) 4478 B5 (DN)	**(1) CBC78T-DS-43**			
	A4	5G CBAND	ERICSSON AIR6449 B77D	330°	36'-0"	–	–			
	A5	5G CBAND	ERICSSON AIR6419 B77G	330°	36'-0"	–	–			
BETA	B1	LTE 700 LTE 1900	COMMSCOPE SBNHH-1D65A	250°	128'-6"	(1) 4415 B25 **(1) 4478 B12A**	–	(1) DC6-48-60-18-8C-EV		
	B2	LTE 700 LTE AWS	COMMSCOPE SBNHH-1D65A	250°	121'-10"	(1) 4426 B66	–			
	B3	LTE 700 5G 850	COMMSCOPE SBNHH-1D65A	250°	121'-10"	–	**(1) CBC78T-DS-43**			
	B4	5G CBAND	ERICSSON AIR6449 B77D	250°	36'-0"	–	–	**(1) DC9-48-60-24-8C-EV**		
	B5	5G CBAND	ERICSSON AIR6419 B77G	250°	36'-0"	–	–			
GAMMA	C1	LTE 700 LTE 1900	COMMSCOPE SBNHH-1D65A	140°	128'-6"	(1) 4415 B25 **(1) 4478 B12A**	–			
	C2	LTE 700 LTE AWS	COMMSCOPE SBNHH-1D65A	140°	121'-10"	(1) 4426 B66	–			
	C3	LTE 700 5G 850	COMMSCOPE SBNHH-1D65A	140°	121'-10"	(1) 4478 B14 (1) 4478 B5 (DN)	**(1) CBC78T-DS-43**			
	C4	5G CBAND	ERICSSON AIR6449 B77D	140°	36'-0"	–	–			
	C5	5G CBAND	ERICSSON AIR6419 B77G	140°	36'-0"	–	–			
TOTALS			15 TOTAL			11 TOTAL (UP) 2 TOTAL (DN)	3 TOTAL	3 TOTAL		
LEGEND /NOTES	(UP) UP ON TOWER (DN) DOWN NEAR EQUIPMENT AREA *VERIFY LATEST VERSION OF THE RFDS PRIOR TO CONSTRUCTION. *DO NOT USE CABLE LENGTHS FOR CUT LENGTHS – ESTIMATES ONLY – VERIFY IN FIELD PRIOR TO ORDERING MATERIAL.									

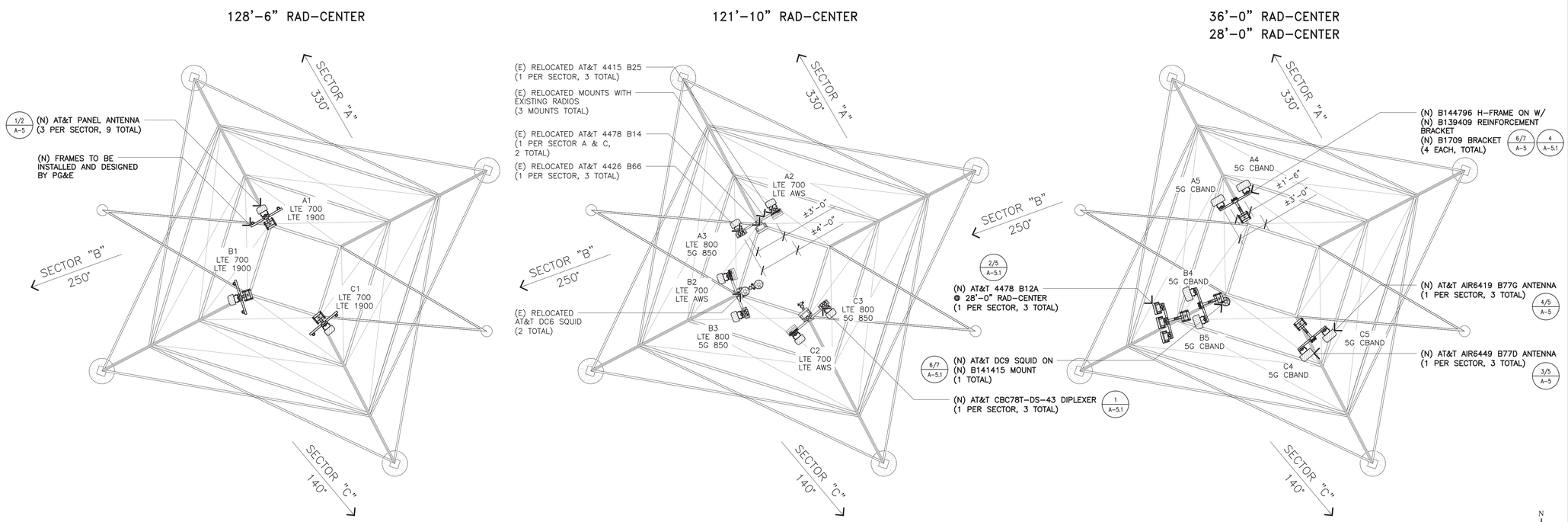

NOTE:
1. PAINT ALL NEW ANTENNAS, TMA'S, COAX LINES AND ASSOCIATED EQUIPMENT TO MATCH EXISTING CONDITIONS
2. ALL BOLTS AND HARDWARE SHOULD BE CHECKED FOR TIGHTNESS AND CONDITION PRIOR TO INSTALLING THE PROPOSED EQUIPMENT
3. NO EQUIPMENT SHALL BE INSTALLED AROUND OR IN FRONT OF THE ANTENNA OR ANTENNA PATTERNS
4. MOUNTED RRUS NOT TO EXCEED 6" ABOVE OR BELOW ANTENNAS
5. CONSTRUCTION TO CONFIRM RAD CENTER BELOW CONDUCTORS IN FIELD

PROPOSED ANTENNA LAYOUT

11X17 SCALE: 3/32" = 1'-0"
24X36 SCALE: 3/16" = 1'-0"
0' 3' 5' 11'

1

at&t Mobility

MasTec Network Solutions
125 KLUG CIRCLE
CORONA, CALIFORNIA 92880

FA CODE:	FA # 10070274
DRAWN BY:	J.C
JOB #:	30097

REV	DATE	DESCRIPTION
1	02/05/2024	100% CD'S - S&S
0	06/27/23	100% CD'S FOR REVIEW
E	04/24/23	95% CD'S UPDATE-RAD CHANGE
D	01/30/23	95% CD'S UPDATE
C	04/28/22	95% CD'S UPDATE
B	03/01/22	90% CD'S UPDATE
A	01/27/22	90% CD'S FOR REVIEW

REGISTERED PROFESSIONAL ENGINEER
JOSEPH RUSSELL KING
C93286
CIVIL
STATE OF CALIFORNIA
Digitally signed by Joseph Russell King
Date: 2024.02.05 17:31:56 -05'00'

CCL04753
BLACKHAWK
CORNER OF BLACKHAWK AND EAGLES NEST
DANVILLE, CALIFORNIA 94506
FA NUMBER
10070274

SHEET TITLE
PROPOSED ANTENNA LAYOUT

SHEET NUMBER
A-3.1

NOTE:
1. PAINT ALL NEW ANTENNAS, TMA'S, COAX LINES AND ASSOCIATED EQUIPMENT TO MATCH EXISTING CONDITIONS
2. ALL BOLTS AND HARDWARE SHOULD BE CHECKED FOR TIGHTNESS AND CONDITION PRIOR TO INSTALLING THE PROPOSED EQUIPMENT
3. NO EQUIPMENT SHALL BE INSTALLED AROUND OR IN FRONT OF THE ANTENNA OR ANTENNA PATTERNS
4. SITE WALK REQUIRED TO CONFIRM PROPOSED BUILD, MIGHT NEED TO LOWER BELOW CONDUCTOR H-FRAMES
5. CONSTRUCTION TO CONFIRM RAD CENTER BELOW CONDUCTORS IN FIELD

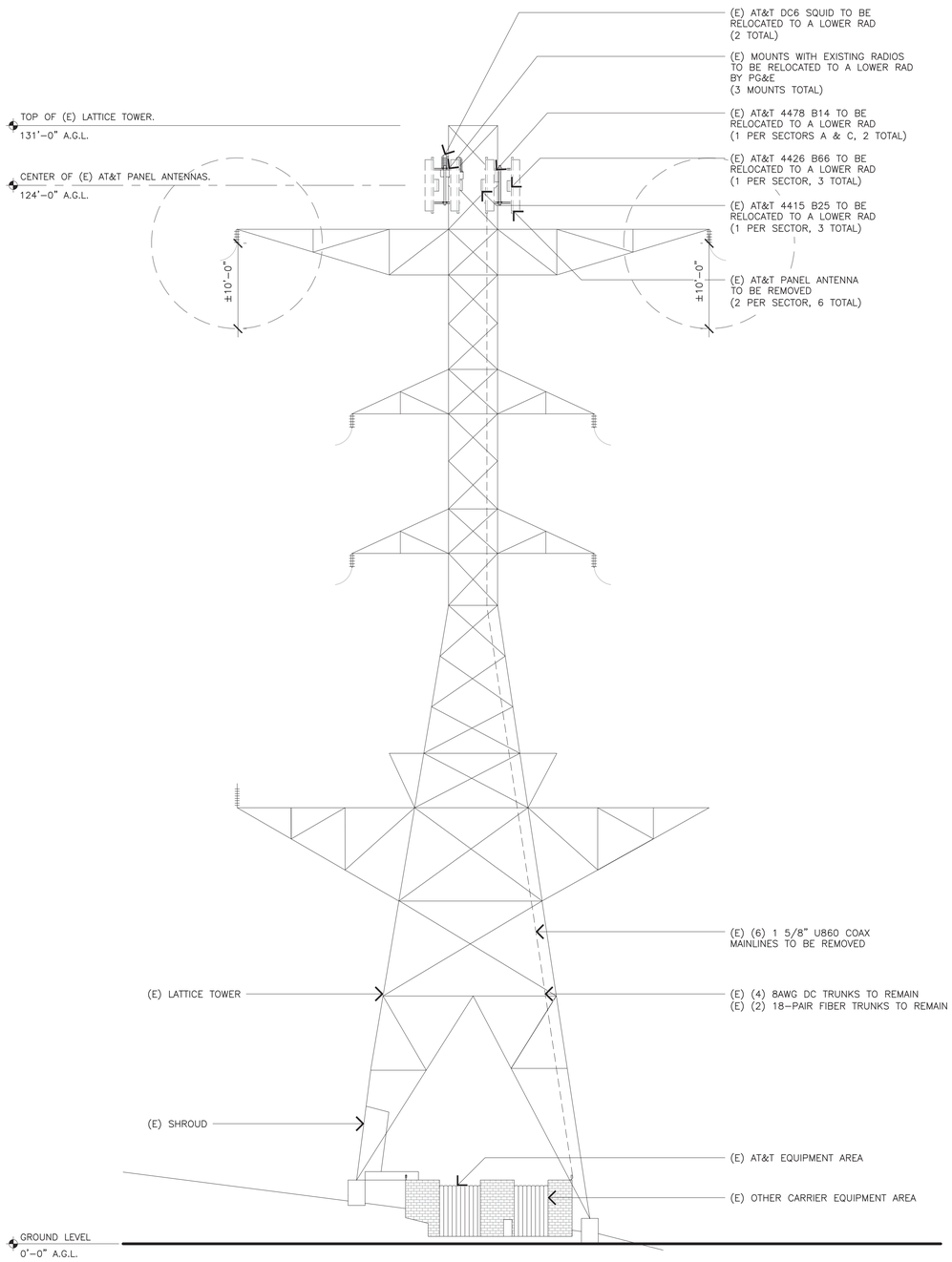

EXISTING SOUTHWEST ELEVATION

11X17 SCALE: 1/16" = 1'-0"
24X36 SCALE: 1/8" = 1'-0"
0' 4' 8' 16'

1

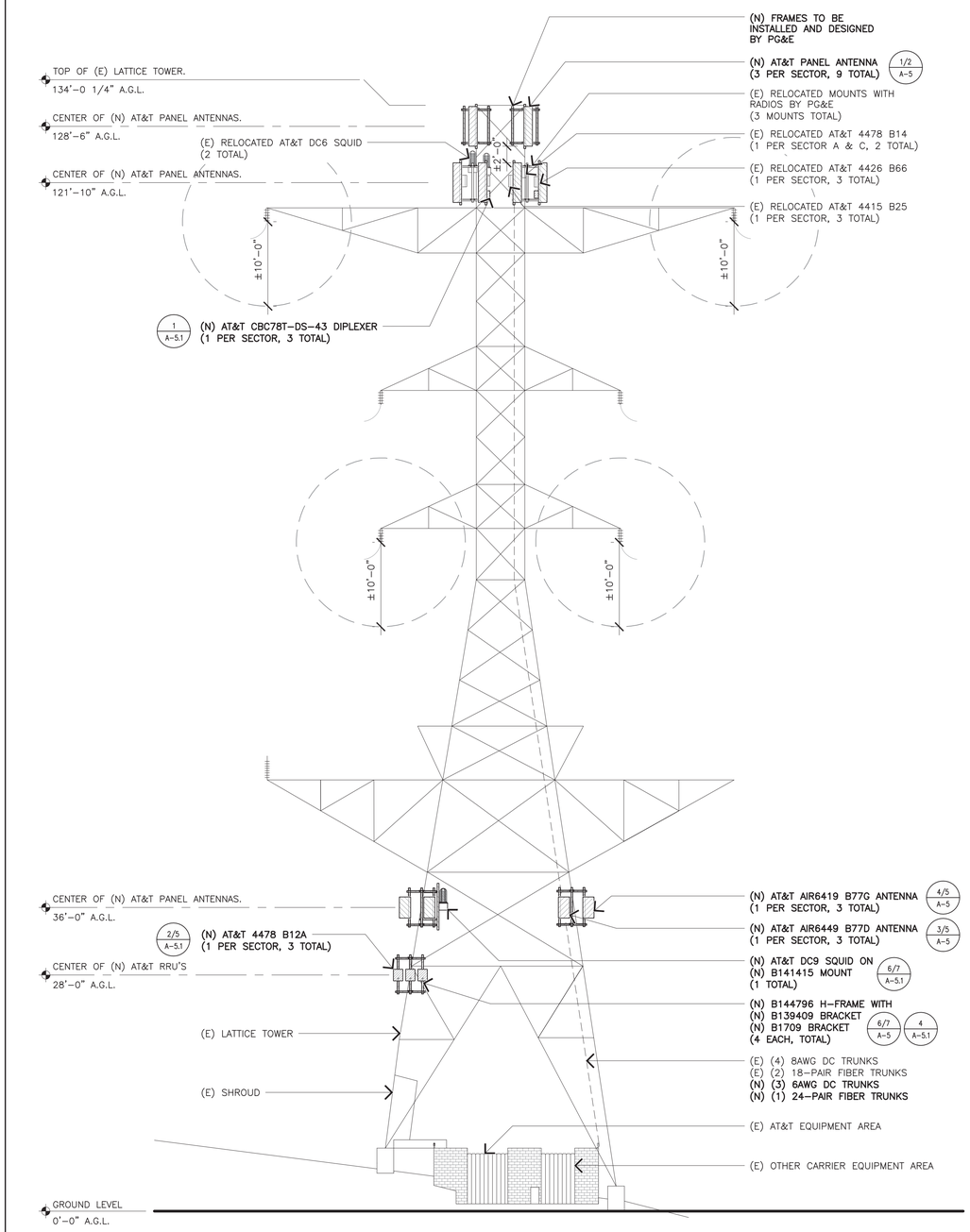

PROPOSED SOUTHWEST ELEVATION

11X17 SCALE: 1/16" = 1'-0"
24X36 SCALE: 1/8" = 1'-0"
0' 4' 8' 16'

2

at&t Mobility

MasTec Network Solutions
125 KLUG CIRCLE
CORONA, CALIFORNIA 92880

FA CODE:	FA # 10070274
DRAWN BY:	J.C
JOB #:	30097

REV	DATE	DESCRIPTION
1	02/05/2024	100% CD'S - S&S
0	06/27/23	100% CD'S FOR REVIEW
E	04/24/23	95% CD'S UPDATE-RAD CHANGE
D	01/30/23	95% CD'S UPDATE
C	04/28/22	95% CD'S UPDATE
B	03/01/22	90% CD'S UPDATE
A	01/27/22	90% CD'S FOR REVIEW

REGISTERED PROFESSIONAL ENGINEER
JOSEPH RUSSELL KING
C93286
CIVIL
STATE OF CALIFORNIA

Digitally signed by Joseph Russell King
Date: 2024.02.05 17:32:11 -05'00'

IT IS A VIOLATION OF LAW FOR ANY PERSON, UNLESS THEY ARE ACTING UNDER THE DIRECTION OF A LICENSED PROFESSIONAL ENGINEER, TO ALTER THIS DOCUMENT.

CCL04753
BLACKHAWK
CORNER OF BLACKHAWK AND EAGLES NEST
DANVILLE, CALIFORNIA 94506
FA NUMBER
10070274

SHEET TITLE
ELEVATION

SHEET NUMBER
A-4

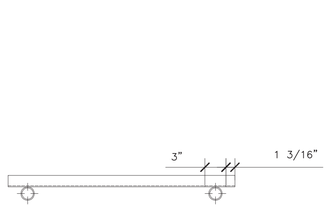

SECTION B

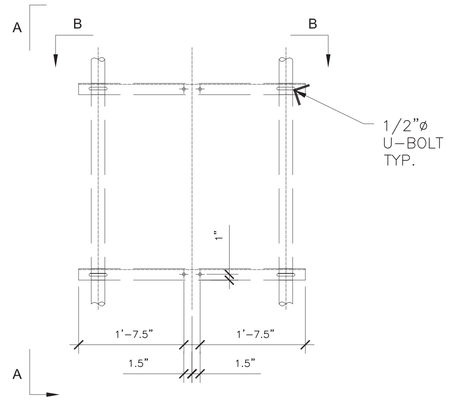

ELEVATION

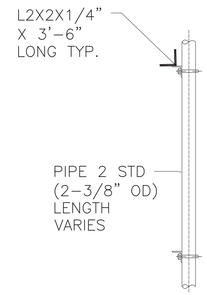

SECTION A

B144796 H-FRAME DETAIL

SCALE: NONE | 6

PARTS LIST

MARK	DESCRIPTION	QTY
139401	BRKT WELDMENT	1
139402	TUBE STEEL	1
139408	BRKT WELDMENT	1
96344	ANGLE	1
139411	ANGLE	1
81534	FORMED PLATE	1

HARDWARE LIST

SYM	QTY	DESCRIPTION
A5	4	1/2ø X 1 1/2 SET SCREW
J7	2	5/8ø X 1 3/4 GS BOLT ASSY.
J8	2	5/8ø X 2 GS BOLT ASSY.
J16	1	5/8ø X 4 GS BOLT ASSY.
BLT	2	5/8ø X 8 BOLT W/6" THREAD
N5	2	5/8ø NUT
LWS	2	5/8ø LOCKWASHER

* A MINIMUM OF 2 SET SCREWS MUST BE IN CONTACT WITH PART NO. "139402"

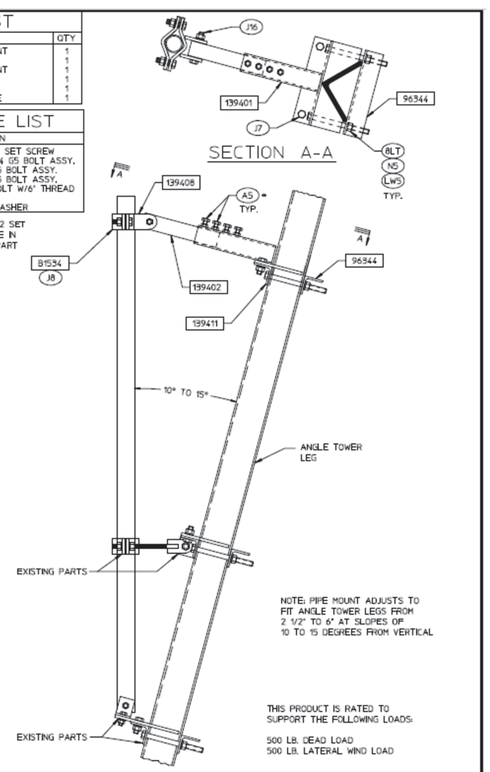

NOTE: PIPE MOUNT ADJUSTS TO FIT ANGLE TOWER LEGS FROM 2 1/2" TO 6" AT SLOPES OF 10 TO 15 DEGREES FROM VERTICAL

THIS PRODUCT IS RATED TO SUPPORT THE FOLLOWING LOADS:

500 LB. DEAD LOAD
500 LB. LATERAL WIND LOAD

PRODUCT NO. B139409

MODIFICATION FOR B1709
PCS PIPE MOUNT ASSEMBLY
FOR 4-LEG ANGLE TOWERS

MICROFLECT
3575 25TH STREET SE
SALEM, OR 97302-0985
(503)363-9267 FAX (503) 363-4613

BY	DAH
CK	AH
DATE	01JUL14
S.O.	----

DWG. NO. B-139409 | SHEET 1 OF 1

REV	DESCRIPTION	DRAWN	DATE	CHECKED
A	ADD 1/2" SET SCREWS			
B	ADD 1/2" SET SCREWS			

B139409 REINFORCEMENT BRACKET

SCALE: NONE | 7

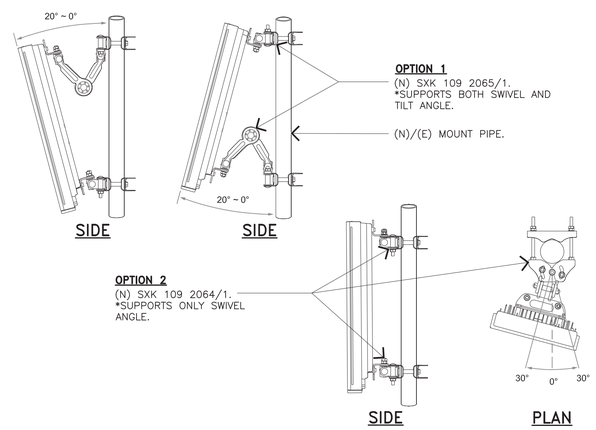

ANTENNA MOUNTING DETAIL

SCALE: NONE | 5

ERICSSON AIR6449 B77D

DIMENSIONS, HXWXD: 30.4"X15.9"X8.1"
WEIGHT, WITHOUT PRE-MOUNTED CLAMPS: 81.6 LBS
WIND LOAD, FRONTAL: 478 N. @ 42 M/S.

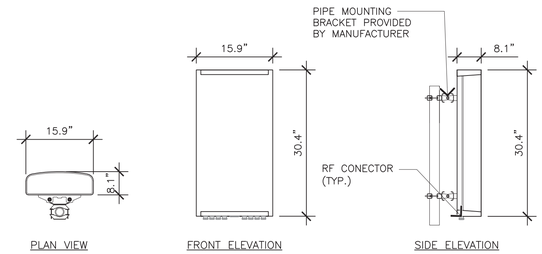

ANTENNA SPECIFICATIONS

SCALE: NONE | 3

ITEM NO.	DESCRIPTION	QUANTITY
1	PIPE CLAMP, LIGHT WEIGHT	2
2	MOUNT, PIPE CLAMP, LIGHT WEIGHT	2
3	BOLT,CARRIAGE,M10X160,STL,GALV	4
4	NUT,HEX,M10,STL,GALV	20
5	WSHR,LK,SPLT,M10,STL,GALV	10
6	WSHR,FLT,M10,10.5X20X2,STL,GALV	4
7	SCR,HCS,HEX,M10X35,STL,GALV	6

ATTENTION: INSERT M10 BOLTS AND M10 FLAT WASHERS INTO BRACKET WITH TABS PRIOR TO ATTACHING BRACKET TO ANTENNA.

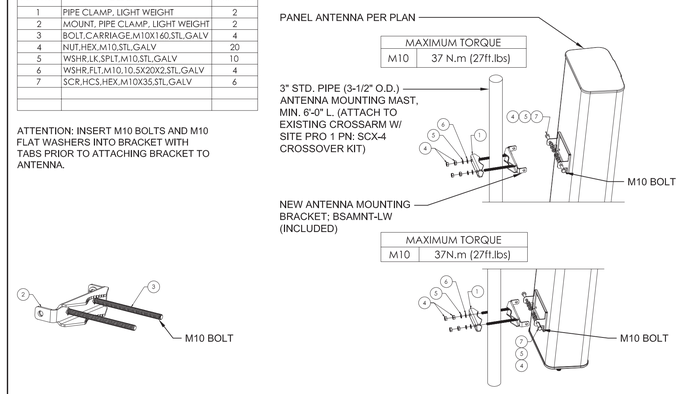

ANTENNA MOUNTING DETAIL

SCALE: NONE | 2

ERICSSON AIR6419 B77G

DIMENSIONS, HXWXD: 30.4"X15.9"X8.1"
WEIGHT, WITHOUT PRE-MOUNTED CLAMPS: 81.6 LBS

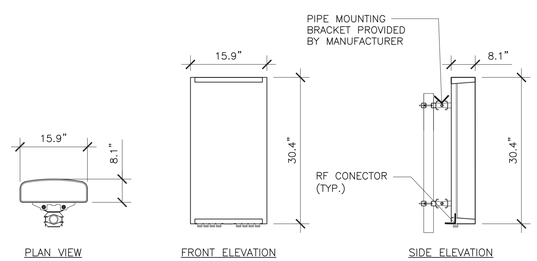

ANTENNA SPECIFICATIONS

SCALE: NONE | 4

COMMSCOPE SBNHH-1D65A

DIMENSIONS, HXWXD: 55.6"X11.9"X7.1"
WEIGHT, WITHOUT PRE-MOUNTED CLAMPS: 33.5 LBS
WIND LOAD, FRONTAL: 46.3 LBF. @ 150 KM/H.
WIND LOAD, LATERAL: 38.0 LBF. @ 150 KM/H.
WIND LOAD, REAR: 46.8 LBF. @ 150 KM/H.

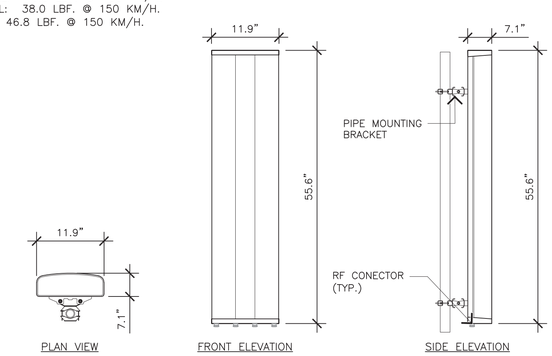

ANTENNA SPECIFICATIONS

SCALE: NONE | 1

at&t Mobility

MasTec Network Solutions
125 KLUG CIRCLE
CORONA, CALIFORNIA 92880

FA CODE:	FA # 10070274
DRAWN BY:	J.C
JOB #:	30097

REV	DATE	DESCRIPTION
1	02/05/2024	100% CD'S - S&S
0	06/27/23	100% CD'S FOR REVIEW
E	04/24/23	95% CD'S UPDATE-RAD CHANGE
D	01/30/23	95% CD'S UPDATE
C	04/28/22	95% CD'S UPDATE
B	03/01/22	90% CD'S UPDATE
A	01/27/22	90% CD'S FOR REVIEW

REGISTERED PROFESSIONAL ENGINEER
JOSEPH RUSSELL KING
C93286
CIVIL
STATE OF CALIFORNIA

Digitally signed by Joseph Russell King
Date: 2024.02.05 17:32:27 -05'00'

IT IS A VIOLATION OF LAW FOR ANY PERSON, UNLESS THEY ARE ACTING UNDER THE DIRECTION OF A LICENSED PROFESSIONAL ENGINEER, TO ALTER THIS DOCUMENT.

CCL04753
BLACKHAWK
CORNER OF BLACKHAWK AND EAGLES NEST
DANVILLE, CALIFORNIA 94506
FA NUMBER
10070274

SHEET TITLE
DETAILS

SHEET NUMBER
A-5

RAYCAP DC9-48-60-24-8C-EV	
DIMENSIONS: L X W X H	18.28" X 20.24" X 31.4"
NOMINAL OPERATING VOLTAGE	-48 VDC
NOMINAL DISCHARGE CURRENT	20 KA 8/20MS
MAXIMUM CONTINUOUS OPERATING VOLTAGE	60 VDC
VOLTAGE PROTECTION RATING:	330 V
TOTAL WEIGHT	26.2 LBS

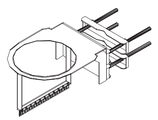

CONTRACTOR TO USE "THREAD LUBRICANT" ON MOUNTING BOLTS DURING INSTALLATION

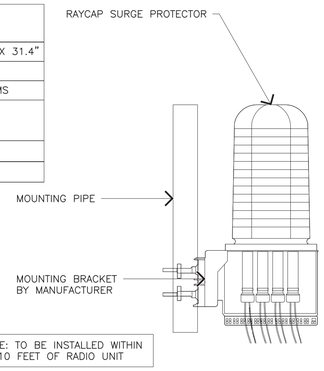

NOTE: TO BE INSTALLED WITHIN 10 FEET OF RADIO UNIT

SURGE SUPPRESSOR DETAIL

SCALE: NONE | 7

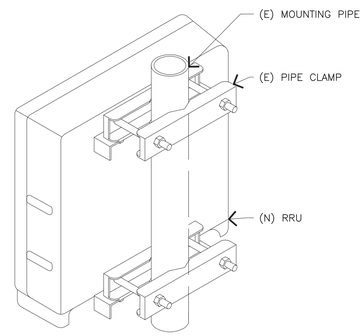

ISO VIEW

RRU MOUNT DETAIL

SCALE: NONE | 5

RAYCAP DC-12-48-60-0-25E

WEIGHT (SYSTEM & MOUNT) : 56.3 LBS
DIMENSIONS, HxWxD : 22.4"x18.17"x6.37"

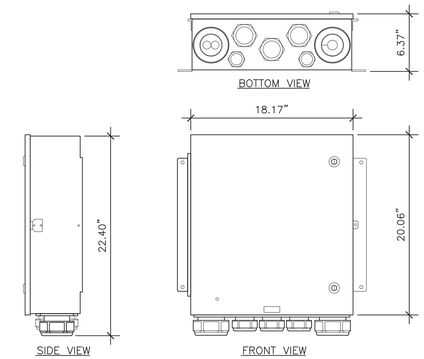

DC-12 SURGE SUPPRESSOR

SCALE: NONE | 3

ERICSSON 4478 B12A

COLOR: GRAY
DIMENSIONS, HxWxD: 18.0"x13.4"x7.9"
WEIGHT: 57.2 LBS.

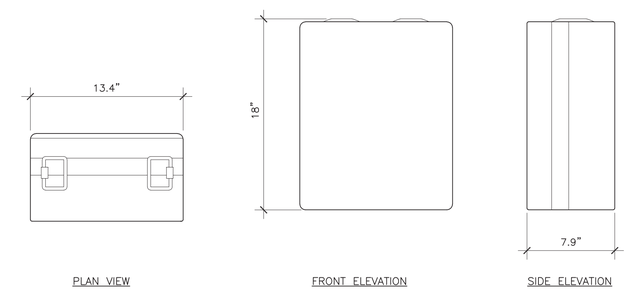

RRU DETAIL

SCALE: NONE | 2

CBC78T-DS-43-2X DIPLEXER

DIMENSIONS, HxWxD 6.4"x6.9"x4.7"
WEIGHT: 20.723 LBS

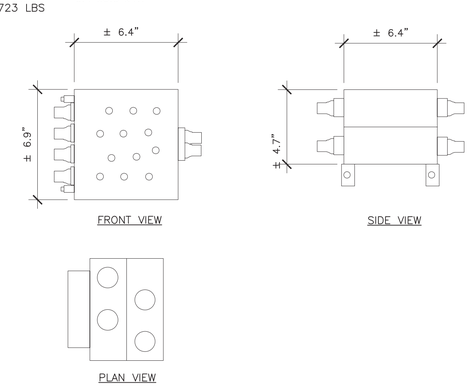

DIPLEXER DETAIL

SCALE: NONE | 1

PARTS LIST

MARK	DESCRIPTION	QTY
141419	BRKT WELDMENT	2
139402	TUBE STEEL	2
139408	BRKT WELDMENT	2
141418	PLATE	2
139411	ANGLE	2
B1534	FORMED PLATE	2

HARDWARE LIST

SYM	QTY	DESCRIPTION
A5	8	1/2ø X 1 1/2 SET SCREW
J7	4	5/8ø X 1 3/4 G5 BOLT ASSY.
J8	4	5/8ø X 2 G5 BOLT ASSY.
J16	2	5/8ø X 4 G5 BOLT ASSY.
BLT	4	5/8ø X 8 BOLT W/6" THREAD
N5	4	5/8ø NUT
LWS	4	5/8ø LOCKWASHER

* A MINIMUM OF 2 SET SCREWS MUST BE IN CONTACT WITH PART NO. "139402"

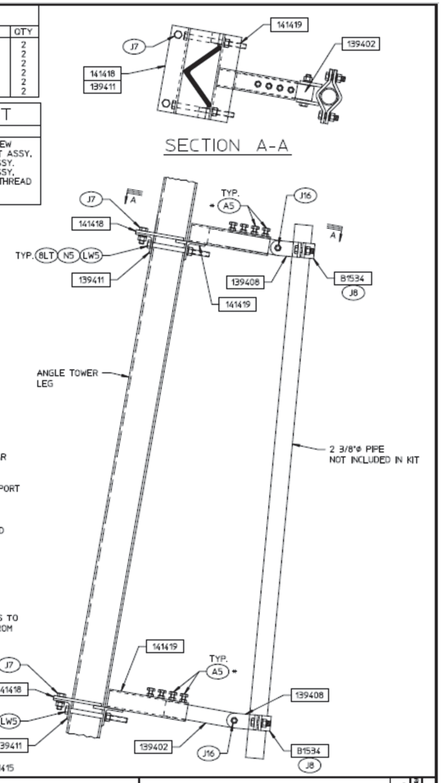

THIS PRODUCT IS USED TO SUPPORT RRUs ON INSIDE OF TOWER. IT HAS 6" OF ADJUSTMENT TO HELP CLEAR INTERNAL OBSTRUCTIONS.

PRODUCT IS RATED TO SUPPORT THE FOLLOWING LOADS:

350 LB. DEAD LOAD
500 LB. LATERAL WIND LOAD

NOTE: PIPE MOUNT ADJUSTS TO FIT ANGLE TOWER LEGS FROM 2 1/2" TO 6"

PRODUCT NO. B141415

INSTALLATION DRAWING
INSIDE MOUNT FOR RRUs
FOR 4-LEG ANGLE TOWERS

MICROFLECT
3575 25TH STREET SE
SALEM, OR 97302-0965
(503)363-9267 FAX (503) 363-4613

BY AH | CK MF | DATE 31MAR15 | S.O. ------

DWG NO B-141415 | SHEET 1 OF 1

B141415 REINFORCEMENT BRACKET

SCALE: NONE | 6

PARTS LIST
B1709 PIPE MOUNT ASSEMBLY

MARK	DESCRIPTION	QTY
B1534	FORMED PLATE	2
16259	CLIP ANGLE	2
96344	ANGLE, 1T	2
96351	ANGLE WELDMENT	1
96357	THREADED ROD WELDMENT	2
96360	PIPE 2 3/8ø X 69"	1
96480	PLATE, 8#	1
96481	ANGLE, 1T	1
96482	PLATE, 6#	1

HARDWARE LIST

SYM	QTY	DESCRIPTION
J16	1	1/2ø X 4 G5 BOLT ASSY.
I6	2	1/2ø X 1 1/2 G5 BOLT ASSY
J7	6	5/8ø X 1 3/4 G5 BOLT ASSY.
BLT	4	5/8ø X 8 BOLT W/6" THREAD
N5	8	5/8ø NUT
LWS	8	5/8ø LOCKWASHER

TOTAL GALV. WT. = 65#

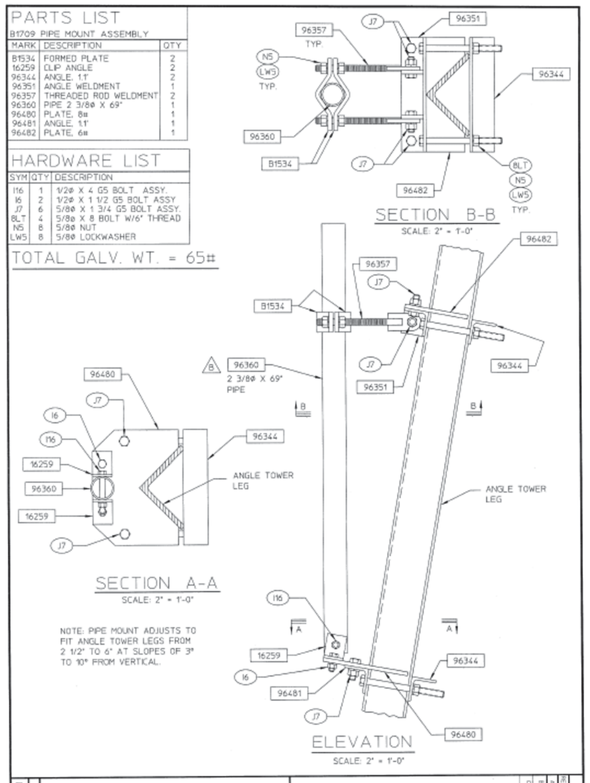

NOTE: PIPE MOUNT ADJUSTS TO FIT ANGLE TOWER LEGS FROM 2 1/2" TO 6" AT SLOPES OF 3° TO 10° FROM VERTICAL.

31-B1709
PCS PIPE MOUNT ASSEMBLY
FOR 4-LEG ANGLE TOWERS

MICROFLECT
3575 25TH STREET SE
SALEM, OR 97302-0965
(503)363-9267 FAX (503) 363-4613

BY PM | CK GS | DATE 30JAN97 | S.O. ------

DWG NO 31-B1709 | SHEET 1 OF 1

B1709 BRACKET

SCALE: NONE | 4

at&t Mobility

MasTec Network Solutions
125 KLUG CIRCLE
CORONA, CALIFORNIA 92880

FA CODE:	FA # 10070274
DRAWN BY:	J.C
JOB #:	30097

REV	DATE	DESCRIPTION
1	02/05/2024	100% CD'S - S&S
0	06/27/23	100% CD'S FOR REVIEW
E	04/24/23	95% CD'S UPDATE-RAD CHANGE
D	01/30/23	95% CD'S UPDATE
C	04/28/22	95% CD'S UPDATE
B	03/01/22	90% CD'S UPDATE
A	01/27/22	90% CD'S FOR REVIEW

REGISTERED PROFESSIONAL ENGINEER
JOSEPH RUSSELL KING
C93286
CIVIL
STATE OF CALIFORNIA

Digitally signed by Joseph Russell King
Date: 2024.02.05 17:32:43-05'00'

IT IS A VIOLATION OF LAW FOR ANY PERSON, UNLESS THEY ARE ACTING UNDER THE DIRECTION OF A LICENSED PROFESSIONAL ENGINEER, TO ALTER THIS DOCUMENT.

CCL04753
BLACKHAWK
CORNER OF BLACKHAWK AND EAGLES NEST
DANVILLE, CALIFORNIA 94506
FA NUMBER
10070274

SHEET TITLE
DETAILS

SHEET NUMBER
A-5.1

NOT USED

SCALE: NONE | 5

NOT USED

SCALE: NONE | 3

MARATHON®

From the World Leader in VRLA Battery Technology

Designed for durability in Telecommunications and Electric Utility applications, the GNB® Industrial Power **Front Terminal MARATHON®** series provides high performance and reliability in long duration discharge applications. The location of the terminals on the front (vs. the top) of the battery greatly facilitates the installation and maintenance of the product when placed in a cabinet enclosure or on a standard relay rack tray. The **MARATHON®** Front Terminal battery series highlights another example of GNB's extensive experience and worldwide leadership in VRLA technology.

"Designed-in" Quality Manufacturing

Quality manufacturing processes for the **MARATHON®** series batteries incorporate the industry's most advanced technologies including: an automated helium leak detection system, a computer controlled "fill by weight" acid filler, and a temperature controlled water bath formation process. Each and every unit is capacity tested.

High Performance MARATHON® Features

- Patented "Diamond Side-Wall" Design maintains structural integrity in higher operating temperatures
- Durable Flame Retardant Polypropylene Container and Cover complies with UL94 V-0; 28% L.O.I.
- Carry Handles facilitate ease of installation
- High-Compression Absorbent Glass Mat (AGM) Technology ensures greater than 99% recombination efficiency
- Integrated Flash Arrestor ultrasonically welded into cover for secure and safe protection
- 10 Year Design Life in float applications @ 25°C (77°F); 12 year @ 20°C (68°F)
- Superior Lead-Tin-Calcium Positive Alloy helps to resist corrosion
- Higher Vent Opening Pressure minimizes unnecessary gassing; one-way self resealing device
- Front Accessible Copper Alloy, 6 mm, Female Terminals ensures low resistance, high integrity connections
- "Easy On\Easy Off" Terminal Post Protector provides added safety
- Post Design accomodates voltage/diagnostic probes
- Footprint Ready fits in all standard 23" Relay Rack Applications
- Compliance: Designed in accordance with IEC 60896-21/-22
- No Transport Restrictions: Complies with IATA/ICAO Special Provision A67; DOT-CFR Title 49; IMDG Amendment 34-08

UL Recognized Component

Applications

MARATHON® Batteries incorporate GNB's advanced VRLA technology designed for long life and high performance in:

Telecommunications
- Distributed Power
- PCS
- Cellular
- Broadband

Electric Utility
- Switchgear Control Power
- Communications

UPS
- Industrial Long Duration

2

MARATHON FRONT TERMINAL SPECIFICATIONS

MODEL NUMBER	VOLTAGE	CAPACITY (AH) 8HR TO 1.75 VPC @ 25°C	CAPACITY (AH) 10HR TO 1.75 VPC @ 20°C	NOMINAL DIMENSIONS INCHES A	B	C	MILLIMETERS A	B	C	NOMINAL WEIGHT LBS.	KG.
M12V90FT	12	86	86	15.55	4.13	10.63	395	105	270	79	35.8
M12V105FT	12	104	100	20.12	4.33	9.38	511	110	238	79	35.8
M12V125FT	12	125	121	22.00	4.90	11.15	559	124	283	105	47.6
M12V155FT	12	155	150	22.00	4.90	11.15	559	124	283	119	53.8
M12V180FT	12	180	175	22.00	4.90	12.50	559	124	318	133	60

*1 BATTERY STRING = 4 BATTERY UNITS

BATTERY STORAGE SYSTEM THRESHOLD QUANTITIES	
BATTERY MODEL NUMBER	M12V155FT
BATTERY VOLTAGE	12V
BATTERY TECHNOLOGY	LEAD ACID
QUANTITY OF EXISTING BATTERIES	4 STRINGS (16 BATTERIES)
QUANTITY OF NEW BATTERIES	1 STRING (4 BATTERIES)
QUANTITY OF TOTAL BATTERIES	5 STRINGS (20 BATTERIES)
EXISTING BATTERY STORAGE SYSTEM CAPACITY	155AH PER BATTERY
NEW BATTERY STORAGE SYSTEM CAPACITY	155AH PER BATTERY
NEW BATTERY STORAGE SYSTEM CAPACITY (V*AH)/1000	37.2 KWH

* TOTAL VOLUME IS LESS THAN 70KWH, WHICH DOES NOT EXCEED ENERGY CAPACITY THRESHOLD PER CFC SECTION 1207, THEREFORE NO ADDITIONAL ENERGY STORAGE NEEDED .

CALIFORNIA FIRE CODE 2022

TABLE 1207.1.1
ENERGY STORAGE SYSTEM (ESS) THRESHOLD QUANTITIES

TECHNOLOGY	ENERGY CAPACITY[a]
Lead-acid batteries, all types	70 KWh (252 Megajoules)[c]
Nickel-cadmium batteries (Ni-Cd)	70 KWh (252 Megajoules)
Nickel-metal hydride (Ni-MH)	70 KWh (252 Megajoules)
Lithium-ion batteries	20 KWh (72 Megajoules)
Flow batteries[b]	20 KWh (72 Megajoules)
Other battery technologies	10 KWh (36 Megajoules)
Capacitor ESS	3 KWh (10.8 Megajoules)
Other electrochemical ESS technologies	3 KWh (10.8 Megajoules)

For SI: 1 kilowatt hour = 3.6 megajoules.

a. Energy capacity is the total energy capable of being stored (nameplate rating), not the usable energy rating. For units rated in Amp-Hours, KWh shall equal rated voltage multiplied by the amp-hour rating divided by 1000.

b. Shall include vanadium, zinc-bromine, polysulfide-bromide, and other flowing electrolyte type technologies.

c. 50 gallons of lead-acid battery electrolyte shall be considered equivalent to 70 KWh.

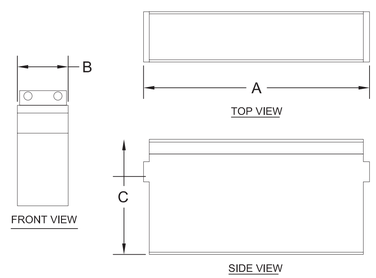

MODEL NUMBER	SHORT CIRCUIT CURRENT AMPS	INTERNAL RESISTANCE (mOhms)
M12V90FT	2358	4.5
M12V105FT	3125	4.0
M12V125FT	2814	3.2
M12V155FT	3883	3.0
M12V180FT	4147	3.0

FLOAT VOLTAGE & CHARGING
CONSTANT VOLTAGE CHARGING IS RECOMMENDED.
RECOMMENDED FLOAT VOLTAGE: 2.27 VPC @ 25°C (77°F)
FLOAT VOLTAGE RANGE: 2.25 TO 2.30 VPC @ 25°C (77°F)
EQUALIZE VOLTAGE: 2.35 VPC FOR 24 HOURS OR
EQUALIZE VOLTAGE: 2.40 VPC FOR 12 HOURS

NOTE:

DESIGN AND/OR SPECIFICATIONS SUBJECT TO CHANGE WITHOUT NOTICE. IF QUESTIONS ARISE, CONTACT YOUR LOCAL GNB SALES REPRESENTATIVE FOR CLARIFICATION.

BATTERY SPECIFICATIONS AND CAPACITIES

SCALE: NONE | 4

BASEBAND 6673

DIMENSIONS, HXWXD: 2.59"X17.5"X9.05"
WEIGHT: 20.9 LBS

FRONT VIEW

6648 BASEBAND UNIT

SCALE: NONE | 2

INFINITY RECTIFIER

MODEL: NE050AC48ATEZ
HEIGHT: 1.63" WIDTH: 5.23"
DEPTH: 13.85" WEIGHT: 5.95 LBS

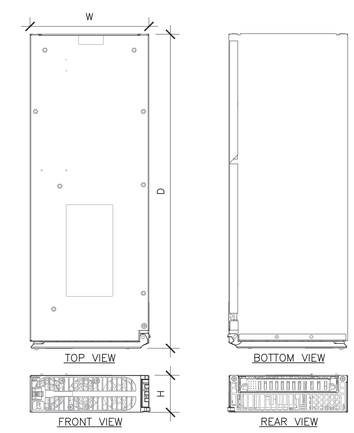

INFINITY RECTIFIER DETAIL

SCALE: NONE | 1

at&t Mobility

MasTec Network Solutions

125 KLUG CIRCLE
CORONA, CALIFORNIA 92880

FA CODE:	FA # 10070274
DRAWN BY:	J.C
JOB #:	30097

REV	DATE	DESCRIPTION
1	02/05/2024	100% CD'S - S&S
0	06/27/23	100% CD'S FOR REVIEW
E	04/24/23	95% CD'S UPDATE-RAD CHANGE
D	01/30/23	95% CD'S UPDATE
C	04/28/22	95% CD'S UPDATE
B	03/01/22	90% CD'S UPDATE
A	01/27/22	90% CD'S FOR REVIEW

REGISTERED PROFESSIONAL ENGINEER
JOSEPH RUSSELL KING
C93286
CIVIL
STATE OF CALIFORNIA

Digitally signed by Joseph Russell King
Date: 2024.02.05 17:33:02-05'00'

IT IS A VIOLATION OF LAW FOR ANY PERSON, UNLESS THEY ARE ACTING UNDER THE DIRECTION OF A LICENSED PROFESSIONAL ENGINEER, TO ALTER THIS DOCUMENT.

CCL04753
BLACKHAWK
CORNER OF BLACKHAWK AND EAGLES NEST
DANVILLE, CALIFORNIA 94506
FA NUMBER
10070274

SHEET TITLE
GROUNDING DETAILS

SHEET NUMBER
A-5.2

NOTE:
DETAIL IS FOR DIAGRAMMATIC PURPOSED ONLY. OTHER EQUIPMENT NOT SHOWN FOR CLARITY.

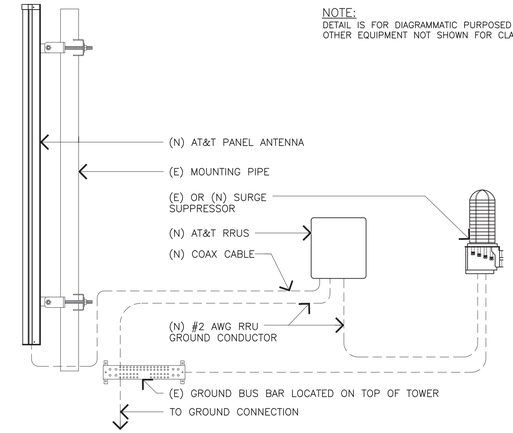

ANTENNA/RRU CONNECTION

SCALE: NONE | 3

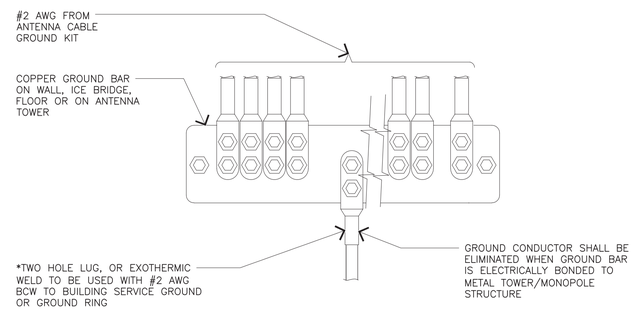

NOTE:
GROUND BARS AT BOTTOM OF TOWERS/MONOPOLES SHALL ONLY USE EXOTHERMIC WELDS.

WIRE TO GROUND BAR CONNECTION

SCALE: NONE | 2

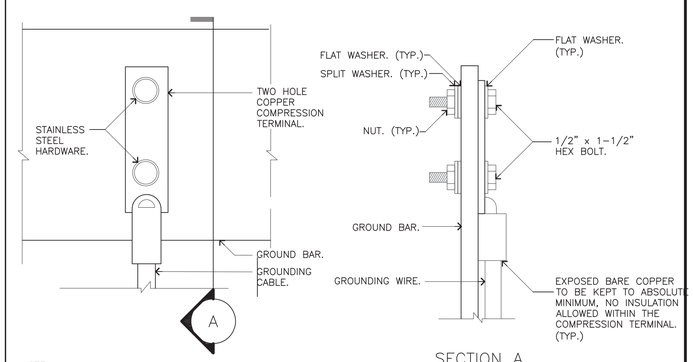

NOTE:
1. "DOUBLING UP" OR "STACKING" OF CONNECTIONS IS NOT PERMITTED.
2. OXIDE INHIBITING COMPOUND TO BE USED AT ALL LOCATIONS AND TO BE APPLIED PRIOR TO ADDING HARDWARE.

GROUND BAR CONNECTION

SCALE: NONE | 1

NOT USED

SCALE: NONE | 5

NOT USED

SCALE: NONE | 4

at&t Mobility

MasTec Network Solutions
125 KLUG CIRCLE
CORONA, CALIFORNIA 92880

FA CODE:	FA # 10070274
DRAWN BY:	J.C
JOB #:	30097

REV	DATE	DESCRIPTION
1	02/05/2024	100% CD'S - S&S
0	06/27/23	100% CD'S FOR REVIEW
E	04/24/23	95% CD'S UPDATE-RAD CHANGE
D	01/30/23	95% CD'S UPDATE
C	04/28/22	95% CD'S UPDATE
B	03/01/22	90% CD'S UPDATE
A	01/27/22	90% CD'S FOR REVIEW

REGISTERED PROFESSIONAL ENGINEER
JOSEPH RUSSELL KING
C93286
CIVIL
STATE OF CALIFORNIA

Digitally signed by Joseph Russell King
Date: 2024.02.05 17:33:17 -05'00'

IT IS A VIOLATION OF LAW FOR ANY PERSON, UNLESS THEY ARE ACTING UNDER THE DIRECTION OF A LICENSED PROFESSIONAL ENGINEER, TO ALTER THIS DOCUMENT.

CCL04753
BLACKHAWK
CORNER OF BLACKHAWK AND EAGLES NEST
DANVILLE, CALIFORNIA 94506
FA NUMBER
10070274

SHEET TITLE
GROUNDING DETAILS

SHEET NUMBER
G-1

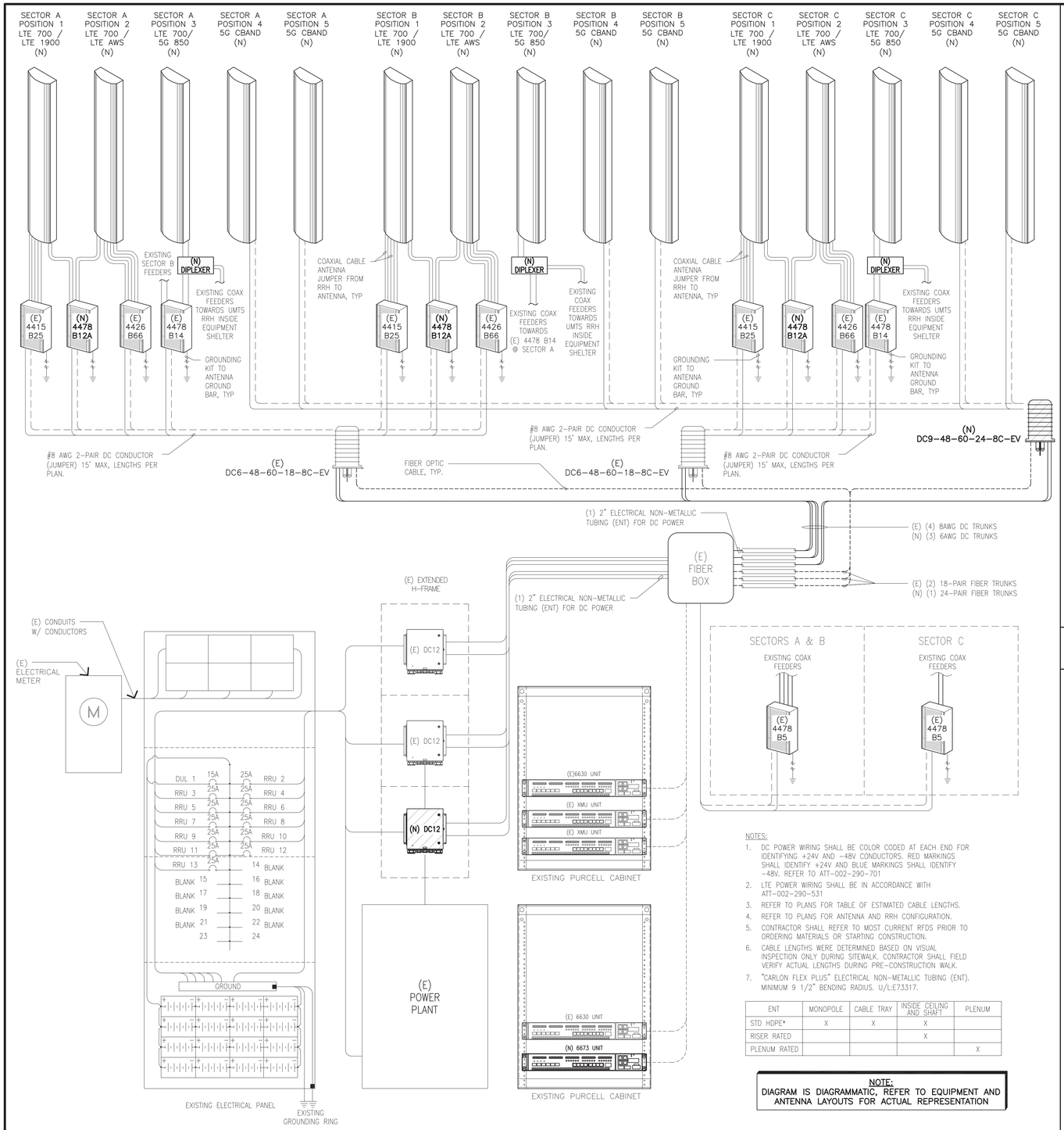

NOTES:

1. DC POWER WIRING SHALL BE COLOR CODED AT EACH END FOR IDENTIFYING +24V AND -48V CONDUCTORS. RED MARKINGS SHALL IDENTIFY +24V AND BLUE MARKINGS SHALL IDENTIFY -48V. REFER TO ATT-002-290-701
2. LTE POWER WIRING SHALL BE IN ACCORDANCE WITH ATT-002-290-531
3. REFER TO PLANS FOR TABLE OF ESTIMATED CABLE LENGTHS.
4. REFER TO PLANS FOR ANTENNA AND RRH CONFIGURATION.
5. CONTRACTOR SHALL REFER TO MOST CURRENT RFDS PRIOR TO ORDERING MATERIALS OR STARTING CONSTRUCTION.
6. CABLE LENGTHS WERE DETERMINED BASED ON VISUAL INSPECTION ONLY DURING SITEWALK. CONTRACTOR SHALL FIELD VERIFY ACTUAL LENGTHS DURING PRE-CONSTRUCTION WALK.
7. "CARLON FLEX PLUS" ELECTRICAL NON-METALLIC TUBING (ENT). MINIMUM 9 1/2" BENDING RADIUS. U/L:E73317.

ENT	MONOPOLE	CABLE TRAY	INSIDE CEILING AND SHAFT	PLENUM
STD HDPE*	X	X	X	
RISER RATED			X	
PLENUM RATED				X

NOTE:
DIAGRAM IS DIAGRAMMATIC, REFER TO EQUIPMENT AND ANTENNA LAYOUTS FOR ACTUAL REPRESENTATION

SINGLE LINE DIAGRAM

SCALE: NONE | 3

PER SPCT COMPLETED ON: 11-08-2021

- (E) GE/INFINITY RBA72 POWER PLANT : (1) TOTAL
- (E) GE/INFINITY -48 RECTIFIERS (4) TOTAL
- (N) GE/INFINITY -48 RECTIFIERS (4) TOTAL (8) REQUIRED
- (E) STRINGS 155AH BATTERIES (3) TOTAL

- (E) BATTERY BACK UP CABINET : (1) TOTAL
- (E) STRINGS 155AH BATTERIES (1) TOTAL
- (N) STRINGS 155AH BATTERIES (1) TOTAL
- (5) TOTAL STRINGS 155AH BATTERIES FOR 4.00 HOURS BACK UP.

- VERTIV
- N/A
- DC TRUNK CALCULATOR RAN, NO VERTIV UPCONVERTERS REQUIRED FOR NEW 4478 B12 RADIOS OR NEW AIR ANTENNAS ON NEW #6 DC TRUNKS.

- IF THERE IS ANY DISCREPANCY FOUND AT CI025 PLEASE CONTACT BERNARD NAIDU IMMEDIATELY

POWER PLANT/BATTERY DETAILS

SCALE: NONE | 2

FINAL TOWER MOUNTED EQUIPMENT

ABOVE CONDUCTOR

- (9) ANTENNAS
- (8) RRHS
- (2) SQUIDS
- (2) 2" INNERDUCT CONDUITS
- (4) 8AWG POWER TRUNKS (IN INNERDUCT) (EXISTING)
- (1) 18 PAIR FIBER TRUNKS (IN INNERDUCT)
- (36) ½" ANTENNA JUMPERS
- (12) 1 5/8" COAX MAINLINES

BELOW CONDUCTOR

- (6) ANTENNAS
- (3) RRHS
- (1) SQUIDS
- (2) 2" INNERDUCT CONDUITS
- (3) 6AWG POWER TRUNKS (IN INNERDUCT) (NEW)
- (1) 24 PAIR FIBER TRUNKS (IN INNERDUCT) (NEW)
- (12) ½" ANTENNA JUMPERS TO ABOVE CONDUCTOR ANTENNAS

FINAL TOWER EQUIPMENT COUNT

SCALE: NONE | 1

at&t Mobility

MasTec Network Solutions

125 KLUG CIRCLE
CORONA, CALIFORNIA 92880

FA CODE:	FA # 10070274
DRAWN BY:	J.C
JOB #:	30097

REV	DATE	DESCRIPTION
1	02/05/2024	100% CD'S - S&S
0	06/27/23	100% CD'S FOR REVIEW
E	04/24/23	95% CD'S UPDATE-RAD CHANGE
D	01/30/23	95% CD'S UPDATE
C	04/28/22	95% CD'S UPDATE
B	03/01/22	90% CD'S UPDATE
A	01/27/22	90% CD'S FOR REVIEW

REGISTERED PROFESSIONAL ENGINEER
JOSEPH RUSSELL KING
C93286
CIVIL
STATE OF CALIFORNIA

Digitally signed by Joseph Russell King
Date: 2024.02.05 17:33:32 -05'00'

IT IS A VIOLATION OF LAW FOR ANY PERSON, UNLESS THEY ARE ACTING UNDER THE DIRECTION OF A LICENSED PROFESSIONAL ENGINEER, TO ALTER THIS DOCUMENT.

CCL04753
BLACKHAWK
CORNER OF BLACKHAWK AND EAGLES NEST
DANVILLE, CALIFORNIA 94506
FA NUMBER
10070274

SHEET TITLE
ELECTRICAL & LTE SCHEMATIC DIAGRAM

SHEET NUMBER
E-1

RECEIVED on 07/23/2024 CDLP24-02006
By Contra Costa County
Department of Conservation and Development

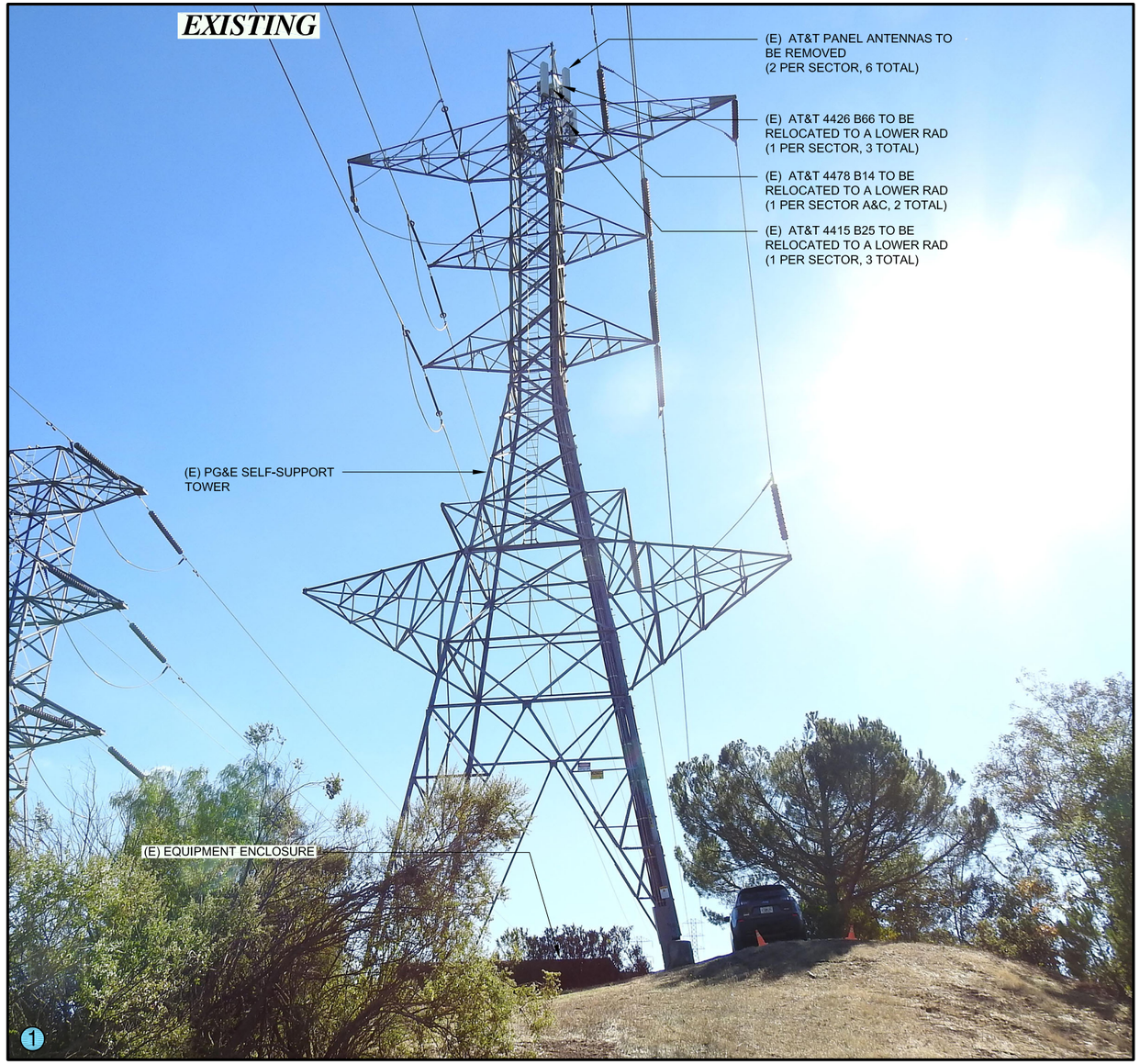

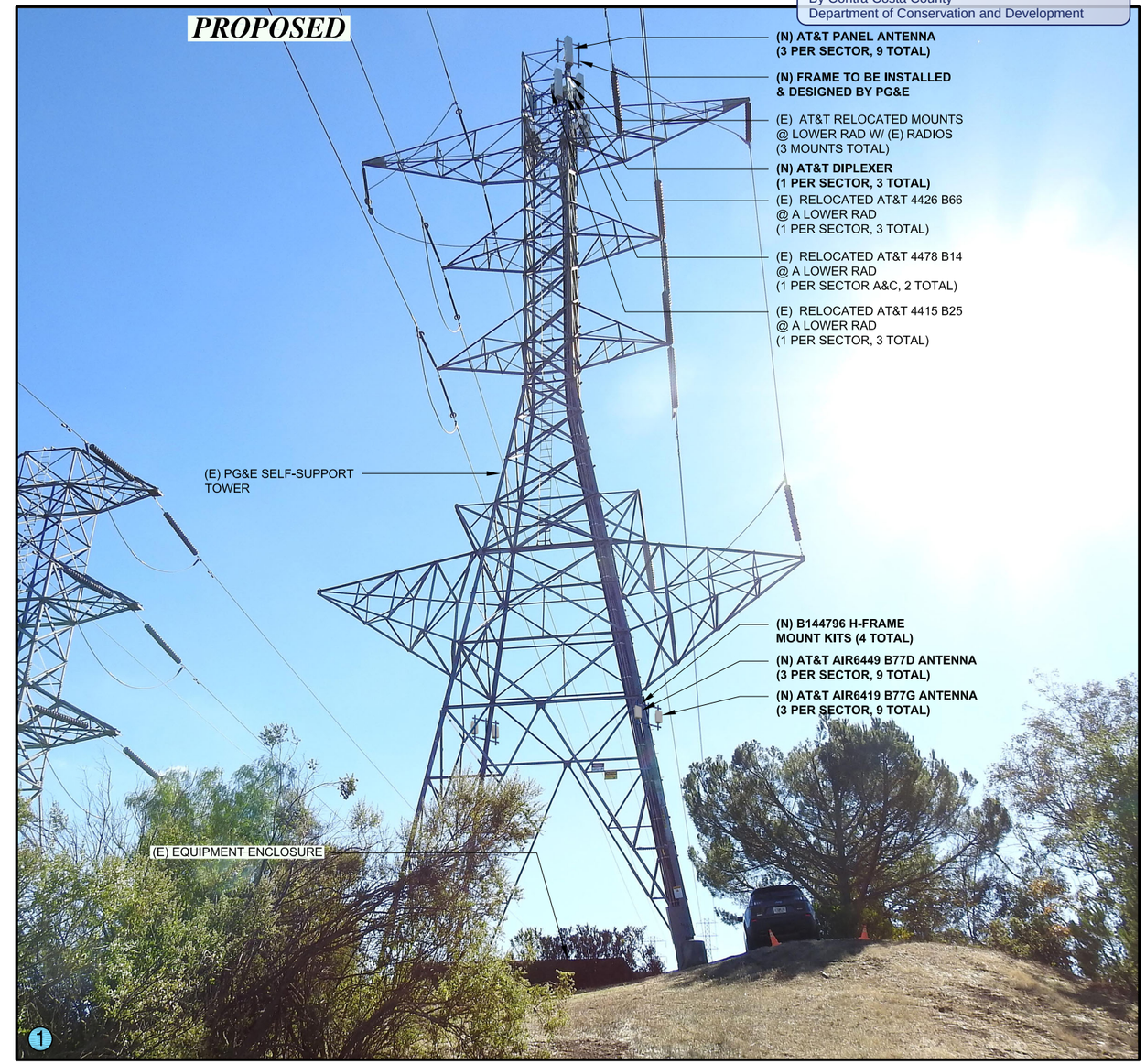

Photosimulation Viewpoint

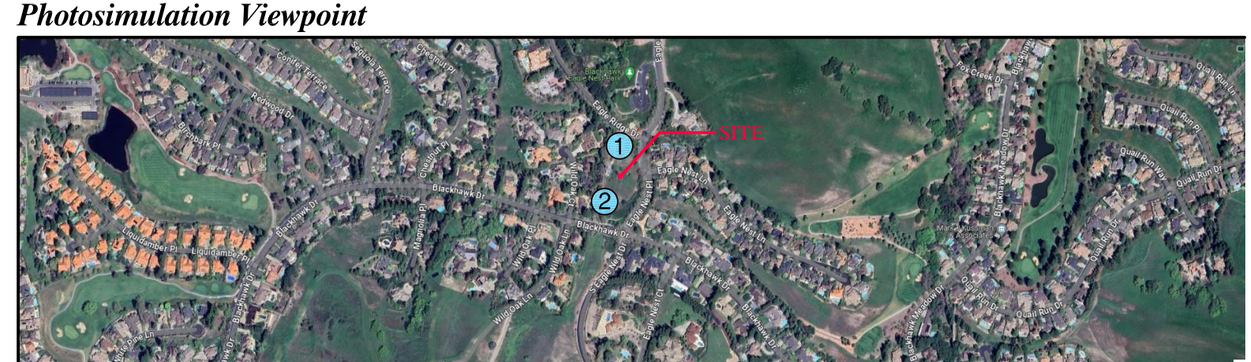

at&t

LTE
BLACKHAWK
(CCL04753)
CORNER OF BLACKHAWK & EAGLES NEST
DANVILLE, CA 94506

MasTec Network Solutions

DRAWN BY:	AJM
SITE NAME:	CCL04753
PHOTOSIM DATE:	03-28-2024

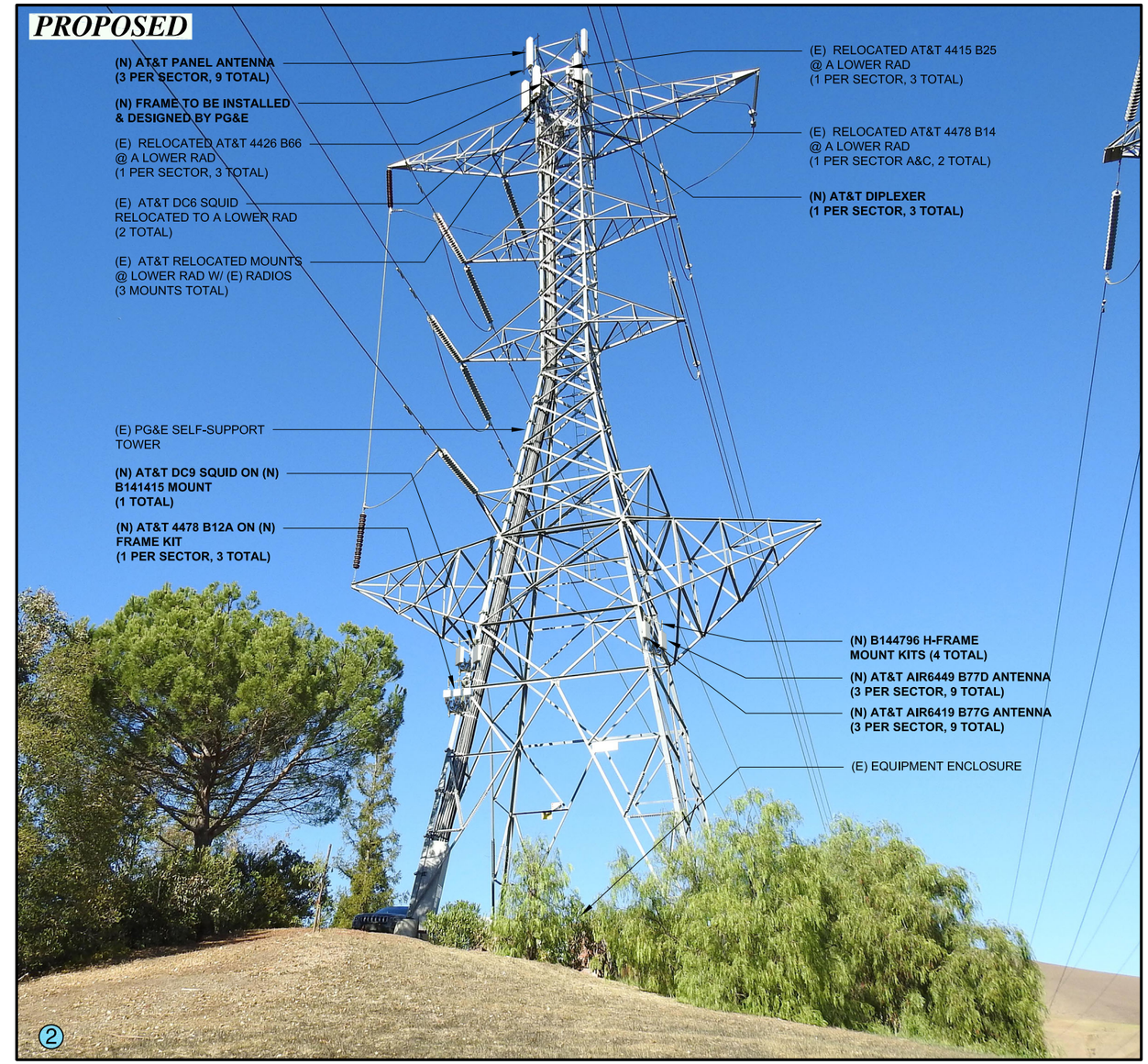

Photosimulation Viewpoint

at&t

LTE
BLACKHAWK
(CCL04753)
CORNER OF BLACKHAWK & EAGLES NEST
DANVILLE, CA 94506

MasTec Network Solutions

DRAWN BY:	AJM
SITE NAME:	CCL04753
PHOTOSIM DATE:	03-28-2024

Radio Frequency – Electromagnetic Energy (RF-EME) Compliance Report

RECEIVED on 02/16/2024 CDLP24-02006
By Contra Costa County
Department of Conservation and Development

Site Number: CCL04753
RFDS ID: 4495866
Pace Number: MRSFR085447, MRSFR086839, MRSFR085416, MRSFR086137, MRSFR086124, MRSFR086893
Blackhawk
Corner of Blackhawk and Eagles Nest
Danville, California 94506
Contra Costa County
37.81743000; -121.90289000 NAD83
Transmission Tower

The proposed AT&T installation will be in compliance with FCC regulations upon proper installation of recommended signage.

EBI Project No. 6224000045
January 29, 2024

Prepared for:

AT&T Mobility, LLC
c/o MasTec Network Solutions
3443 Airport Road
Sacramento, CA 95834

Prepared by:

EBI Consulting
environmental | engineering | due diligence

TABLE OF CONTENTS

APPENDICES

EXECUTIVE SUMMARY

Purpose of Report

EnviroBusiness Inc. (dba EBI Consulting) has been contracted by AT&T Mobility, LLC to conduct radio frequency electromagnetic (RF-EME) modeling for AT&T Site CCL04753 located at Corner of Blackhawk and Eagles Nest in Danville, California to determine RF-EME exposure levels from proposed AT&T wireless communications equipment at this site. As described in greater detail in Section 1.0 of this report, the Federal Communications Commission (FCC) has developed Maximum Permissible Exposure (MPE) Limits for general public exposures and occupational exposures. This report summarizes the results of RF-EME modeling in relation to relevant FCC RF-EME compliance standards for limiting human exposure to RF-EME fields.

This report contains the RF EME analysis for the site, including the following:

- Site Plan with antenna locations
- Graphical representation of theoretical MPE fields based on modeling
- Graphical representation of recommended signage and/or barriers

This document addresses the compliance of AT&T's transmitting facilities independently and in relation to all collocated facilities at the site.

Statement of Compliance

A site is considered out of compliance with FCC regulations if there are areas that exceed the FCC exposure limits <u>and</u> there are no RF hazard mitigation measures in place. Any carrier which has an installation that contributes more than 5% of the applicable MPE must participate in mitigating these RF hazards.

As presented in the sections below, based on worst-case predictive modeling, the worst-case emitted power density may exceed the FCC's general public limit within approximately 23 feet of ATT's proposed antennas at the utility line level. Modeling also indicates that the worst-case emitted power density may exceed the FCC's occupational limit within approximately 7 feet of ATT's proposed antennas at the utility line level.

As such, the proposed AT&T installation is in compliance with FCC regulations upon proper installation of recommended signage and/or barriers.

AT&T Recommended Signage/Compliance Plan

AT&T's RF Exposure: Responsibilities, Procedures & Guidelines document, dated October 28, 2014, requires that:

1. All sites must be analyzed for RF exposure compliance;
2. All sites must have that analysis documented; and
3. All sites must have any necessary signage and barriers installed.

Site compliance recommendations have been developed based upon protocols presented in AT&T's RF Exposure: Responsibilities, Procedures & Guidelines document, dated October 28, 2014, additional guidance provided by AT&T, EBI's understanding of FCC and OSHA requirements, and common industry practice. Barrier locations have been identified (when required) based on guidance presented in AT&T's RF Exposure: Responsibilities, Procedures & Guidelines document, dated October 28, 2014.

The following signage is recommended at this site:

- Yellow CAUTION 2 sign posted at the base of the transmission tower near the climbing ladder.

The signage proposed for installation at this site complies with AT&T's RF Exposure: Responsibilities, Procedures & Guidelines document and therefore complies with FCC and OSHA requirements. Barriers are not recommended on this site. To reduce the risk of exposure and/or injury, EBI recommends that access to the transmission tower or areas associated with the active antenna installation be restricted and secured where possible. More detailed information concerning site compliance recommendations is presented in Section 4.0 and Appendix B of this report.

1.0 FEDERAL COMMUNICATIONS COMMISSION (FCC) REQUIREMENTS

The FCC has established Maximum Permissible Exposure (MPE) limits for human exposure to Radiofrequency Electromagnetic (RF-EME) energy fields, based on exposure limits recommended by the National Council on Radiation Protection and Measurements (NCRP) and, over a wide range of frequencies, the exposure limits developed by the Institute of Electrical and Electronics Engineers, Inc. (IEEE) and adopted by the American National Standards Institute (ANSI) to replace the 1982 ANSI guidelines. Limits for localized absorption are based on recommendations of both ANSI/IEEE and NCRP.

The FCC guidelines incorporate two separate tiers of exposure limits that are based upon occupational/controlled exposure limits (for workers) and general public/uncontrolled exposure limits for members of the general public.

Occupational/controlled exposure limits apply to situations in which persons are exposed as a consequence of their employment and in which those persons who are exposed have been made fully aware of the potential for exposure and can exercise control over their exposure. Occupational/ controlled exposure limits also apply where exposure is of a transient nature as a result of incidental passage through a location where exposure levels may be above general public/uncontrolled limits (see below), as long as the exposed person has been made fully aware of the potential for exposure and can exercise control over his or her exposure by leaving the area or by some other appropriate means.

General public/uncontrolled exposure limits apply to situations in which the general public may be exposed or in which persons who are exposed as a consequence of their employment may not be made fully aware of the potential for exposure or cannot exercise control over their exposure. Therefore, members of the general public would always be considered under this category when exposure is not employment-related, for example, in the case of a telecommunications tower that exposes persons in a nearby residential area.

Table 1 and Figure 1 (below), which are included within the FCC's OET Bulletin 65, summarize the MPE limits for RF emissions. These limits are designed to provide a substantial margin of safety. They vary by frequency to take into account the different types of equipment that may be in operation at a particular facility and are "time-averaged" limits to reflect different durations resulting from controlled and uncontrolled exposures.

The FCC's MPEs are measured in terms of power (mW) over a unit surface area (cm^2). Known as the power density, the FCC has established an occupational MPE of 5 milliwatts per square centimeter (mW/cm^2) and an uncontrolled MPE of 1 mW/cm2 for equipment operating in the 1900 MHz frequency range. For the AT&T equipment operating at 850 MHz, the FCC's occupational MPE is 2.83 mW/cm^2 and an uncontrolled MPE of 0.57 mW/cm^2. For the AT&T equipment operating at 700 MHz, the FCC's occupational MPE is 2.33 mW/cm^2 and an uncontrolled MPE of 0.47 mW/cm^2. These limits are considered protective of these populations.

Table 1: Limits for Maximum Permissible Exposure (MPE)

(A) Limits for Occupational/Controlled Exposure

Frequency Range (MHz)	Electric Field Strength (E) (V/m)	Magnetic Field Strength (H) (A/m)	Power Density (S) (mW/cm^2)	Averaging Time $[E]^2$, $[H]^2$, or S (minutes)
0.3-3.0	614	1.63	(100)*	6
3.0-30	1842/f	4.89/f	($900/f^2$)*	6
30-300	61.4	0.163	1.0	6
300-1,500	--	--	f/300	6
1,500-100,000	--	--	5	6

(B) Limits for General Public/Uncontrolled Exposure				
Frequency Range (MHz)	**Electric Field Strength (E) (V/m)**	**Magnetic Field Strength (H) (A/m)**	**Power Density (S) (mW/cm^2)**	**Averaging Time $[E]^2$, $[H]^2$, or S (minutes)**
0.3-1.34	614	1.63	(100)*	30
1.34-30	824/f	2.19/f	($180/f^2$)*	30
30-300	27.5	0.073	0.2	30
300-1,500	--	--	f/1,500	30
1,500-100,000	--	--	1.0	30

f = Frequency in (MHz)
* Plane-wave equivalent power density

Figure 1. *FCC Limits for Maximum Permissible Exposure (MPE)*

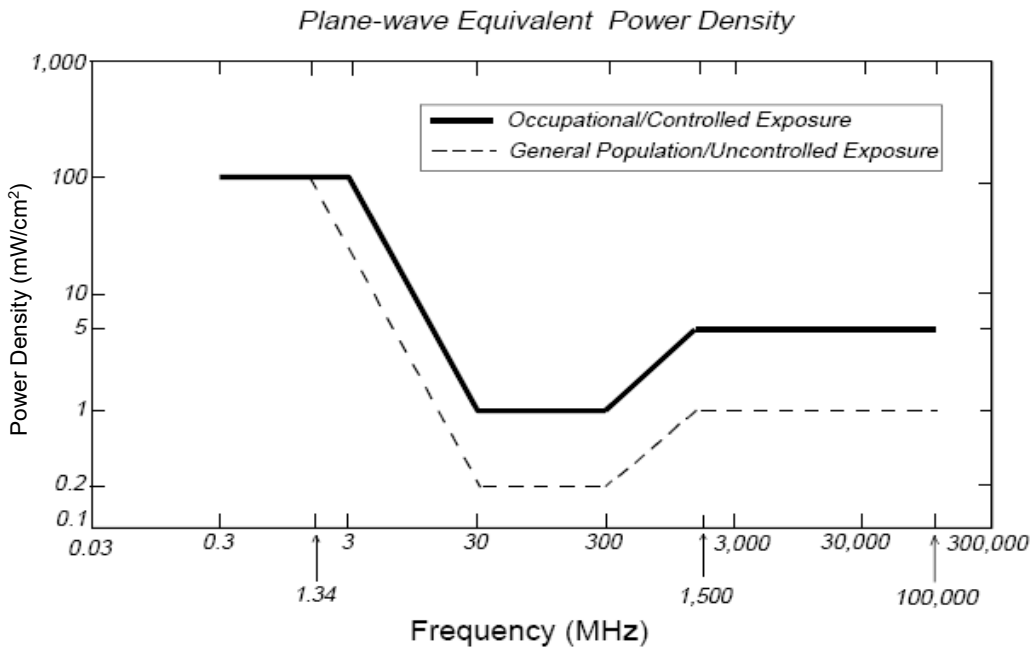

Based on the above, the most restrictive thresholds for exposures of unlimited duration to RF energy for several personal wireless services are summarized below:

Personal Wireless Service	Approximate Frequency	Occupational MPE	Public MPE
Microwave (Point-to-Point)	5,000 - 80,000 MHz	5.00 mW/cm^2	1.00 mW/cm^2
Broadband Radio (BRS)	2,600 MHz	5.00 mW/cm^2	1.00 mW/cm^2
Wireless Communication (WCS)	2,300 MHz	5.00 mW/cm^2	1.00 mW/cm^2
Advanced Wireless (AWS)	2,100 MHz	5.00 mW/cm^2	1.00 mW/cm^2
Personal Communication (PCS)	1,950 MHz	5.00 mW/cm^2	1.00 mW/cm^2
Cellular Telephone	870 MHz	2.90 mW/cm^2	0.58 mW/cm^2
Specialized Mobile Radio (SMR)	855 MHz	2.85 mW/cm^2	0.57 mW/cm^2
Long Term Evolution (LTE)	700 MHz	2.33 mW/cm^2	0.47 mW/cm^2
Most Restrictive Frequency Range	30-300 MHz	1.00 mW/cm^2	0.20 mW/cm^2

MPE limits are designed to provide a substantial margin of safety. These limits apply for continuous exposures and are intended to provide a prudent margin of safety for all persons, regardless of age, gender, size, or health.

Personal Communication (PCS) facilities used by AT&T in this area operate within a frequency range of 700-1900 MHz. Facilities typically consist of: 1) electronic transceivers (the radios or cabinets) connected to wired telephone lines; and 2) antennas that send the wireless signals created by the transceivers to be received by individual subscriber units (PCS telephones). Transceivers are typically connected to antennas by coaxial cables.

Because of the short wavelength of PCS services, the antennas require line-of-site paths for good propagation, and are typically installed above ground level. Antennas are constructed to concentrate energy towards the horizon, with as little energy as possible scattered towards the ground or the sky. This design, combined with the low power of PCS facilities, generally results in no possibility for exposure to approach Maximum Permissible Exposure (MPE) levels, with the exception of areas directly in front of the antennas.

2.0 AT&T RF EXPOSURE POLICY REQUIREMENTS

AT&T's RF Exposure: Responsibilities, Procedures & Guidelines document, dated October 28, 2014, requires that:

1. All sites must be analyzed for RF exposure compliance;
2. All sites must have that analysis documented; and
3. All sites must have any necessary signage and barriers installed.

Pursuant to this guidance, worst-case predictive modeling was performed for the site. This modeling is described below in Section 3.0. Lastly, based on the modeling and survey data, EBI has produced a Compliance Plan for this site that outlines the recommended signage and barriers. The recommended Compliance Plan for this site is described in Section 4.0.

3.0 WORST-CASE PREDICTIVE MODELING

In accordance with AT&T's RF Exposure policy, EBI performed theoretical modeling using RoofMaster™ software to estimate the worst-case power density at the site utility line level and ground-level and/or nearby rooftops resulting from operation of the antennas. RoofMaster™ is a widely-used predictive modeling program that has been developed to predict RF power density values for rooftop and tower telecommunications sites produced by vertical collinear antennas that are typically used in the cellular, PCS, paging and other communications services. Using the computational methods set forth in Federal Communications (FCC) Office of Engineering & Technology (OET) Bulletin 65, "Evaluating Compliance with FCC Guidelines for Human Exposure to Radiofrequency Electromagnetic Fields" (OET-65), RoofMaster™ calculates predicted power density in a scalable grid based on the contributions of all RF sources characterized in the study scenario. At each grid location, the cumulative power density is expressed as a percentage of the FCC limits. Manufacturer antenna pattern data is utilized in these calculations. RoofMaster™ models consist of the Far Field model as specified in OET-65 and an implementation of the OET-65 Cylindrical Model (Sula9). The models utilize several operational specifications for different types of antennas to produce a plot of spatially-averaged power densities that can be expressed as a percentage of the applicable exposure limit. A statistical power factor may be applied to the antenna system based on guidance from the carrier and system manufacturers.

For this report, EBI utilized antenna and power data provided by AT&T and compared the resultant worst-case MPE levels to the FCC's occupational/controlled exposure limits outlined in OET Bulletin 65.

The assumptions used in the modeling are based upon information provided by AT&T and information gathered from other sources. There are no other wireless carriers with equipment installed at this site.

Based on worst-case predictive modeling, the worst-case emitted power density may exceed the FCC's general public limit within approximately 23 feet of AT&T's Sector A, B, and C antennas on the utility

line level. Modeling also indicates that the worst-case emitted power density may exceed the FCC's occupational limit within approximately 7 feet of AT&T's Sector A, B, and C antennas on the utility line level.

Modeling indicates that the worst-case emitted power density may exceed the FCC's general public limit within approximately 63 feet of the CBand antenna face and the occupational limit within approximately 27 feet of the CBand antenna face. Modeling also indicates that the worst-case emitted power density may exceed the FCC's general population limit within approximately 22 feet below the bottom of the AT&T CBand antenna and the occupational limit within approximately 9 feet below the bottom of the AT&T CBand antenna.

At the nearest walking/working surfaces to the AT&T antennas on the utility line level, the maximum power density generated by the AT&T antennas is approximately 1,355.08 percent of the FCC's general public limit (271.02 percent of the FCC's occupational limit). The composite exposure level from all carriers on this site is approximately 1,355.08 percent of the FCC's general public limit (271.02 percent of the FCC's occupational limit) at the nearest walking/working surface to each antenna. It should be noted that percentage of MPE is based on spatially-averaged power densities over a height of six feet, with the height of the utility line being centered within that spatial range. Based on worst-case predictive modeling, there are no areas at ground/street level related to the proposed AT&T antennas that exceed the FCC's occupational or general public exposure limits at this site. At ground/street level, the maximum power density generated by the antennas is approximately 22.14 percent of the FCC's general public limit (4.428 percent of the FCC's occupational limit).

A graphical representation of the RoofMaster™ modeling results is presented in Appendix B.

Microwave dish antennas are designed for point-to-point operations at the elevations of the installed equipment rather than ground-level coverage. Based on AT&T's RF Exposure: Responsibilities, Procedures & Guidelines document, dated October 28, 2014, microwave antennas are considered compliant if they are higher than 20 feet above any accessible walking/working surface. There are no microwaves installed at this site.

4.0 RECOMMENDED SIGNAGE/COMPLIANCE PLAN

Signs are the primary means for control of access to areas where RF exposure levels may potentially exceed the MPE. As presented in the AT&T guidance document, the signs must:

- Be posted at a conspicuous point;
- Be posted at the appropriate locations;
- Be readily visible; and
- Make the reader aware of the potential risks prior to entering the affected area.

The table below presents the signs that may be used for AT&T installations.

CRAN / HETNET Small Cell Decals / Signs		Alerting Signs	
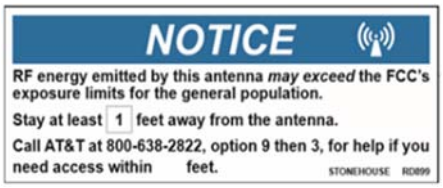	**NOTICE DECAL**	 **TRILINGUAL NOTICE**	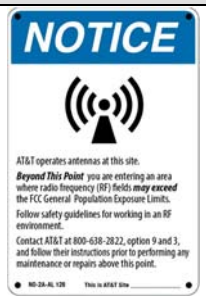 **NOTICE 2**
	**NOTICE SIGN**	 **CAUTION 2 – ROOFTOP**	 **CAUTION 2A**
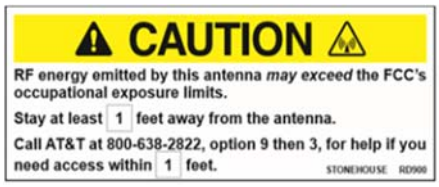	**CAUTION DECAL**	 **CAUTION 2B - TOWER**	 **CAUTION 2C - PARAPETS**
	**CAUTION SIGN**	 **WARNING 1B**	 **WARNING 2A**

Based upon protocols presented in AT&T's RF Exposure: Responsibilities, Procedures & Guidelines document, dated October 28, 2014, and additional guidance provided by AT&T, the following signage is recommended on the site:

- Yellow CAUTION 2 sign posted at the base of the transmission tower near the climbing ladder.

No barriers are required for this site. Barriers should be constructed of weather-resistant plastic or wood fencing. Barriers may consist of railing, rope, chain, or weather-resistant plastic if no other types are permitted or are feasible. Painted stripes should only be used as a last resort and only in regions where there is little chance of snowfall. If painted stripes are selected as barriers, it is recommended that the stripes and signage be illuminated. The signage and any barriers are graphically represented in the Signage Plan presented in Appendix B.

5.0 SUMMARY AND CONCLUSIONS

EBI has prepared this Radiofrequency Emissions Compliance Report for the proposed AT&T telecommunications equipment at the site located at Corner of Blackhawk and Eagles Nest in Danville, California.

EBI has conducted theoretical modeling to estimate the worst-case power density from AT&T antennas to document potential MPE levels at this location and ensure that site control measures are adequate to meet FCC and OSHA requirements, as well as AT&T's corporate RF safety policies. As presented in the preceding sections, based on worst-case predictive modeling, the worst-case emitted power density may exceed the FCC's general public limit within approximately 23 feet of ATT's proposed antennas at the utility line level. Modeling also indicates that the worst-case emitted power density may exceed the FCC's occupational limit within approximately 7 feet of ATT's proposed antennas at the utility line level.

To reduce the risk of exposure and/or injury, EBI recommends that access to the transmission tower or areas associated with the active antenna installation be restricted and secured where possible. Signage is recommended at the site as presented in Section 4.0 and Appendix B. Posting of the signage brings the site into compliance with FCC rules and regulations and AT&T's corporate RF safety policies.

All workers and individuals accessing the transmission tower or persons (including arborists), accessing elevated structures or trees within areas exceeding the general public MPE, must be made aware of the presence and locations of antennas and their associated fields, where applicable.

6.0 LIMITATIONS

This report was prepared for the use of AT&T Mobility, LLC to meet requirements outlined in AT&T's corporate RF safety guidelines. It was performed in accordance with generally accepted practices of other consultants undertaking similar studies at the same time and in the same locale under like circumstances. The conclusions provided by EBI and its partners are based solely on information supplied by AT&T, including modeling instructions, inputs, parameters and methods. Calculations, data, and modeling methodologies for C Band equipment Include a statistical factor reducing the power to 32% of maximum theoretical power to account for spatial distribution of users, network utilization, time division duplexing, and scheduling time. AT&T recommends the use of this factor based on a combination of guidance from its antenna system manufacturers, supporting international industry standards, industry publications, and its extensive experience. The observations in this report are valid on the date of the investigation. Any additional information that becomes available concerning the site should be provided to EBI so that our conclusions may be revised and modified, if necessary. This report has been prepared in accordance with Standard Conditions for Engagement and authorized proposal, both of which are integral parts of this report. No other warranty, expressed or implied, is made.

Appendix A

Personnel Certifications

Preparer Certification

I, Andrew Simpson, state that:

- I am an employee of EnviroBusiness Inc. (d/b/a EBI Consulting), which provides RF-EME safety and compliance services to the wireless communications industry.
- I have successfully completed RF-EME safety training, and I am aware of the potential hazards from RF-EME and would be classified "occupational" under the FCC regulations.
- I am fully aware of and familiar with the Rules and Regulations of both the Federal Communications Commissions (FCC) and the Occupational Safety and Health Administration (OSHA) with regard to Human Exposure to Radio Frequency Radiation.
- I have been trained in on the procedures outlined in AT&T's RF Exposure: Responsibilities, Procedures & Guidelines document (dated October 28, 2014) and on RF-EME modeling using RoofMaster™ modeling software.
- I have reviewed the data provided by the client and incorporated it into this Site Compliance Report such that the information contained in this report is true and accurate to the best of my knowledge.

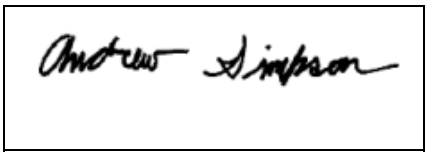

Reviewed and Approved by:

Michael McGuire
Electrical Engineer
mike@h2dc.com

Note that EBI's scope of work is limited to an evaluation of the Radio Frequency – Electromagnetic Energy (RF-EME) field generated by the antennas and broadcast equipment noted in this report. The engineering and design of the building and related structures, as well as the impact of the antennas and broadcast equipment on the structural integrity of the building, are specifically excluded from EBI's scope of work.

Appendix B

Compliance/Signage Plan

Nearest Walking Surface Simulation

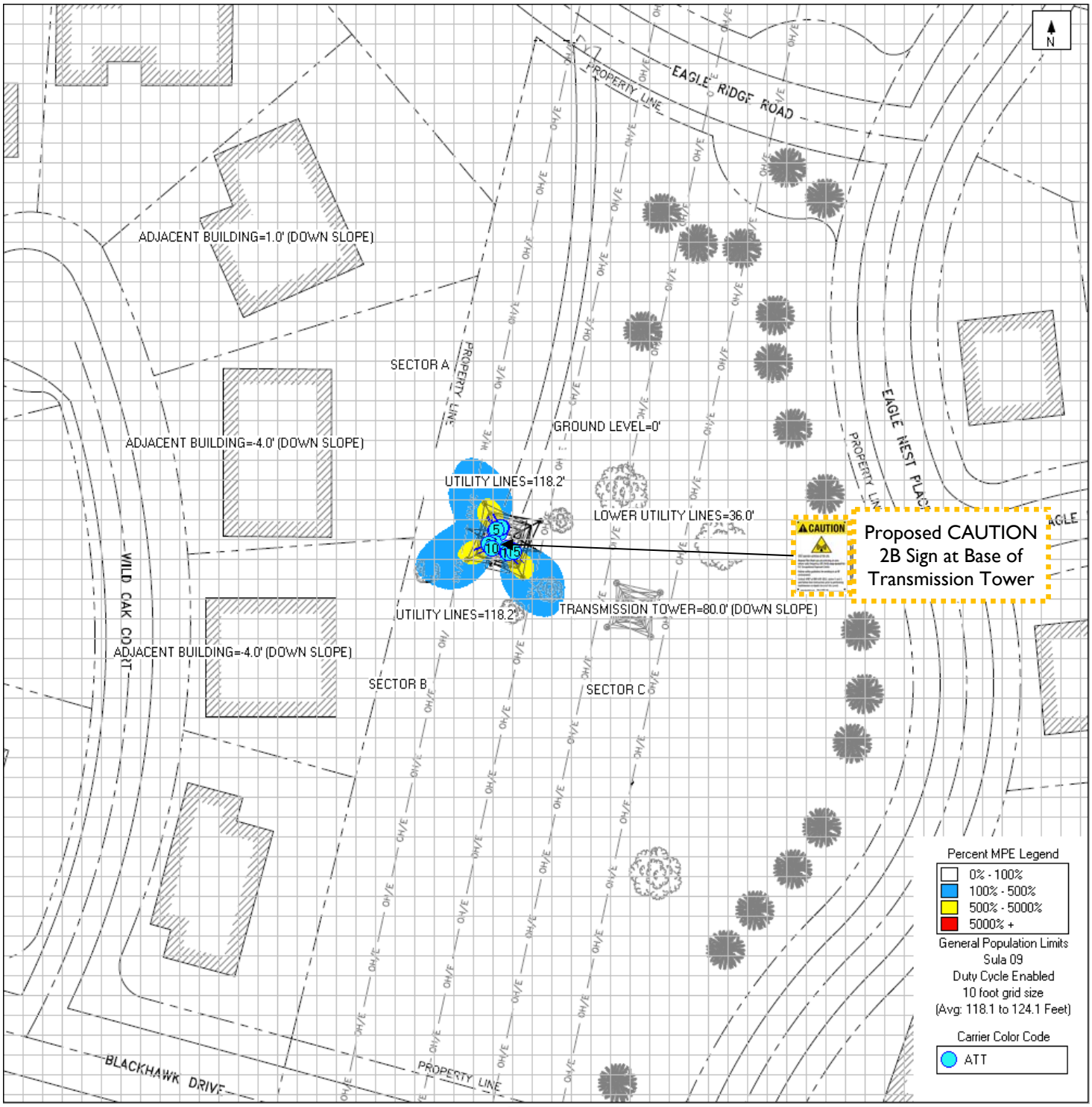

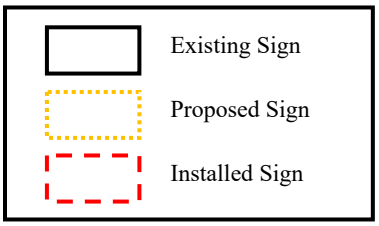

SIGN IDENTIFICATION LEGEND

	AT&T NOTICE 2 Sign		AT&T CAUTION 2 – Rooftop Sign
	AT&T WARNING 1B and 2A Signs		AT&T CAUTION 2B – Tower Sign
	AT&T NOTICE Small Cell Signs		AT&T CAUTION 2C – Parapet Sign
	AT&T CAUTION Small Cell Signs		AT&T TRILINGUAL NOTICE Sign

From:	Planning.review
To:	Adrian Veliz
Cc:	Planning.review; Anne Nounou
Subject:	CDLP24-02006 - 0 NO ADDRESS , DANVILLE
Date:	Thursday, February 22, 2024 8:14:29 AM
Attachments:	image001.png

Dear Adrian,

EBMUD has no comment on the subject agency request.

Best Regards,
Amy

Amy Wen | Sr Administrative Clerk
Water Distribution Planning Division
EBMUD | 100 FLOWING INTO THE FUTURE

San Ramon Valley Fire Protection District
Community Risk Reduction Division
2401 Crow Canyon Road, Suite A
San Ramon, CA 94583

phone: 925.838.6600 **web:** www.firedepartment.org

Thursday, March 7, 2024

Hello Adrian Veliz,

The Fire District has reviewed the Planning Application for the below noted address. Based upon the information provided, comments and requirements have been made as conditions of approval.

If during the course of the entitlement process the project changes, additional requirements may apply. Thank you for the opportunity to comment on the project. Please feel free to contact me directly with any questions or concerns.

PROJECT:	CDLP24-02006
ADDRESS:	203760026 (Unverified)
APPLICATION TITLE:	Planning and Site Development Review
PROJECT NUMBER:	1257616

Roy Wendel
Interim Fire Marshal
rwendel@srvfire.ca.gov
925.838.6687

Planning Comments

Open Issues: 1

PLANNING

General Issues

1. No Comment

Roy Wendel 3/7/24 11:00 AM	The San Ramon Valley Fire Protection District has reviewed the his application and has no comments.